S29PLI27J/S29PLI29J/S29PL064J/S29PL032J 128/128/64/32 Megabit (8/8/4/2 M x 16-Bit) CMOS 3.0 Volt-only, Simultaneous Read/Write Flash Memory with Enhanced VersatileIO™ Control

SPANSION™

Data Sheet

PRELIMINARY

Notice to Readers: This document indicates states the current technical specifications regarding the Spansion product(s) described herein. The Preliminary status of this document indicates that a product qualification has been completed, and that initial production has begun. Due to the phases of the manufacturing process that require maintaining efficiency and quality, this document may be revised by subsequent versions or modifications due to changes in technical specifications.

Publication Number 3I107 **Revision** A **Amendment** 62 **Issue Date** April 7, 2005

This page intentionally left blank.

S29PL127J/S29PL129J/S29PL064J/S29PL032J

128/128/64/32 Megabit (8/8/4/2 M x 16-Bit) CMOS 3.0 Volt-only, Simultaneous Read/Write Flash Memory with Enhanced VersatileIO™ Control

SPANSION™

PRELIMINARY

Distinctive Characteristics

ARCHITECTURAL ADVANTAGES

- **128/128/64/32 Mbit Page Mode devices**
  - Page size of 8 words: Fast page read access from random locations within the page
- **Single power supply operation**
  - Full Voltage range: 2.7 to 3.6 volt read, erase, and program operations for battery-powered applications
- **Dual Chip Enable inputs (only in PL129J)**
  - Two CE# inputs control selection of each half of the memory space
- **Simultaneous Read/Write Operation**
  - Data can be continuously read from one bank while executing erase/program functions in another bank
  - Zero latency switching from write to read operations
- **FlexBank Architecture (PL127J/PL064J/PL032J)**
  - 4 separate banks, with up to two simultaneous operations per device
  - Bank A:
    PL127J -16 Mbit (4 Kw x 8 and 32 Kw x 31)
    PL064J - 8 Mbit (4 Kw x 8 and 32 Kw x 15)
    PL032J - 4 Mbit (4 Kw x 8 and 32 Kw x 7)
  - Bank B:
    PL127J - 48 Mbit (32 Kw x 96)
    PL064J - 24 Mbit (32 Kw x 48)
    PL032J - 12 Mbit (32 Kw x 24)
  - Bank C:
    PL127J - 48 Mbit (32 Kw x 96)
    PL064J - 24 Mbit (32 Kw x 48)
    PL032J - 12 Mbit (32 Kw x 24)
  - Bank D:
    PL127J -16 Mbit (4 Kw x 8 and 32 Kw x 31)
    PL064J - 8 Mbit (4 Kw x 8 and 32 Kw x 15)
    PL032J - 4 Mbit (4 Kw x 8 and 32 Kw x 7)
- **FlexBank Architecture (PL129J)**
  - 4 separate banks, with up to two simultaneous operations per device
  - CE#1 controlled banks:
    Bank 1A:
    PL129J - 16Mbit (4Kw x 8 and 32Kw x 31)
    Bank 1B:
    PL129J - 48Mbit (32Kw x 96)
  - CE#2 controlled banks:
    Bank 2A:
    PL129J - 48 Mbit (32Kw x 96)
    Bank 2B:
    PL129J - 16Mbit (4Kw x 8 and 32Kw x 31)
- **Enhanced VersatileI/O™ (V_{IO}) Control**
  - Output voltage generated and input voltages tolerated on all control inputs and I/Os is determined by the voltage on the V_{IO} pin
  - V_{IO} options at 1.8 V and 3 V I/O for PL127J and PL129J devices
  - 3V V_{IO} for PL064J and PL032J devices
- **SecSi™ (Secured Silicon) Sector region**
  - Up to 128 words accessible through a command sequence
  - Up to 64 factory-locked words
  - Up to 64 customer-lockable words
- **Both top and bottom boot blocks in one device**
- **Manufactured on 110 nm process technology**
- **Data Retention: 20 years typical**
- **Cycling Endurance: 1 million cycles per sector typical**

PERFORMANCE CHARACTERISTICS

- **High Performance**
  - Page access times as fast as 20 ns
  - Random access times as fast as 55 ns
- **Power consumption (typical values at 10 MHz)**
  - 45 mA active read current
  - 17 mA program/erase current
  - 0.2 µA typical standby mode current

SOFTWARE FEATURES

- **Software command-set compatible with JEDEC 42.4 standard**
  - Backward compatible with Am29F, Am29LV, Am29DL, and AM29PDL families and MBM29QM/RM, MBM29LV, MBM29DL, MBM29PDL families
- **CFI (Common Flash Interface) compliant**
  - Provides device-specific information to the system, allowing host software to easily reconfigure for different Flash devices
- **Erase Suspend / Erase Resume**
  - Suspends an erase operation to allow read or program operations in other sectors of same bank
- **Unlock Bypass Program command**
  - Reduces overall programming time when issuing multiple program command sequences

Publication Number 3II07 **Revision** A **Amendment** 62 **Issue Date** April 7, 2005

HARDWARE FEATURES

- **Ready/Busy# pin (RY/BY#)**
  - Provides a hardware method of detecting program or erase cycle completion
- **Hardware reset pin (RESET#)**
  - Hardware method to reset the device to reading array data
- **WP#/ ACC (Write Protect/Acceleration) input**
  - At V_{IL}, hardware level protection for the first and last two 4K word sectors.
  - At V_{IH}, allows removal of sector protection
  - At V_{HH}, provides accelerated programming in a factory setting
- **Persistent Sector Protection**
  - A command sector protection method to lock combinations of individual sectors and sector groups to prevent program or erase operations within that sector
  - Sectors can be locked and unlocked in-system at V_{CC} level
- **Password Sector Protection**
  - A sophisticated sector protection method to lock combinations of individual sectors and sector groups to prevent program or erase operations within that sector using a user-defined 64-bit password
- **Package options**
  - Standard discrete pinouts
    11 x 8 mm, 80-ball Fine-pitch BGA (PL127J/PL129J (VBG080)
    8.15 x 6.15 mm, 48-ball Fine pitch BGA (PL064J/PL032J)
    (VBK048)
  - MCP-compatible pinout
    8 x 11.6 mm, 64-ball Fine-pitch BGA (PL127J and PL129J)
    7 x 9 mm, 56-ball Fine-pitch BGA (PL064J and PL032J)
    Compatible with MCP pinout, allowing easy integration of RAM into existing designs
  - 20 x 14 mm, 56-pin TSOP (PL127J) (TS056)

Notice On Data Sheet Designations

Spansion LLC issues data sheets with Advance Information or Preliminary designations to advise readers of product information or intended specifications throughout the product life cycle, including development, qualification, initial production, and full production. In all cases, however, readers are encouraged to verify that they have the latest information before finalizing their design. The following descriptions of Spansion data sheet designations are presented here to highlight their presence and definitions.

Advance Information

The Advance Information designation indicates that Spansion LLC is developing one or more specific products, but has not committed any design to production. Information presented in a document with this designation is likely to change, and in some cases, development on the product may discontinue. Spansion LLC therefore places the following conditions upon Advance Information content:

> "This document contains information on one or more products under development at Spansion LLC. The information is intended to help you evaluate this product. Do not design in this product without contacting the factory. Spansion LLC reserves the right to change or discontinue work on this proposed product without notice."

Preliminary

The Preliminary designation indicates that the product development has progressed such that a commitment to production has taken place. This designation covers several aspects of the product life cycle, including product qualification, initial production, and the subsequent phases in the manufacturing process that occur before full production is achieved. Changes to the technical specifications presented in a Preliminary document should be expected while keeping these aspects of production under consideration. Spansion places the following conditions upon Preliminary content:

> "This document states the current technical specifications regarding the Spansion product(s) described herein. The Preliminary status of this document indicates that product qualification has been completed, and that initial production has begun. Due to the phases of the manufacturing process that require maintaining efficiency and quality, this document may be revised by subsequent versions or modifications due to changes in technical specifications."

Combination

Some data sheets will contain a combination of products with different designations (Advance Information, Preliminary, or Full Production). This type of document will distinguish these products and their designations wherever necessary, typically on the first page, the ordering information page, and pages with DC Characteristics table and AC Erase and Program table (in the table notes). The disclaimer on the first page refers the reader to the notice on this page.

Full Production (No Designation on Document)

When a product has been in production for a period of time such that no changes or only nominal changes are expected, the Preliminary designation is removed from the data sheet. Nominal changes may include those affecting the number of ordering part numbers available, such as the addition or deletion of a speed option, temperature range, package type, or V_{IO} range. Changes may also include those needed to clarify a description or to correct a typographical error or incorrect specification. Spansion LLC applies the following conditions to documents in this category:

> "This document states the current technical specifications regarding the Spansion product(s) described herein. Spansion LLC deems the products to have been in sufficient production volume such that subsequent versions of this document are not expected to change. However, typographical or specification corrections, or modifications to the valid combinations offered may occur."

Questions regarding these document designations may be directed to your local AMD or Fujitsu sales office.

General Description

The PL127J/PL129J/PL064J/PL032J is a 128/128/64/32 Mbit, 3.0 volt-only Page Mode and Simultaneous Read/Write Flash memory device organized as 8/8/4/2 Mwords. The devices are offered in the following packages:

- 11mm x 8mm, 80-ball Fine-pitch BGA standalone (PL127J and PL129J)
- 8mm x 11.6mm, 64-ball Fine-pitch BGA multi-chip compatible (PL127J/PL129J)
- 8.15mm x 6.15mm, 48-ball Fine-pitch BGA standalone (PL064J/PL032J)
- 7mm x 9mm, 56-ball Fine-pitch BGA multi-chip compatible (PL064J and PL032J)
- 20mm x 14mm, 56-pin TSOP (PL127J)

The word-wide data (x16) appears on DQ15-DQ0. This device can be programmed in-system or in standard EPROM programmers. A 12.0 V V_{PP} is not required for write or erase operations.

The device offers fast page access times of 20 to 30 ns, with corresponding random access times of 55 to 70 ns, respectively, allowing high speed microprocessors to operate without wait states. To eliminate bus contention the device has separate chip enable (CE#), write enable (WE#) and output enable (OE#) controls. Note: Device PL129J has 2 chip enable inputs (CE1#, CE2#).

Simultaneous Read/Write Operation with Zero Latency

The Simultaneous Read/Write architecture provides **simultaneous operation** by dividing the memory space into 4 banks, which can be considered to be four separate memory arrays as far as certain operations are concerned. The device can improve overall system performance by allowing a host system to program or erase in one bank, then immediately and simultaneously read from another bank with zero latency (with two simultaneous operations operating at any one time). This releases the system from waiting for the completion of a program or erase operation, greatly improving system performance.

The device can be organized in both top and bottom sector configurations. The banks are organized as follows:

Bank	PLI27J Sectors	PL064J Sectors	PL032J Sectors
A	16 Mbit (4 Kw x 8 and 32 Kw x 31)	8 Mbit (4 Kw x 8 and 32 Kw x 15)	4 Mbit (4 Kw x 8 and 32 Kw x 7)
B	48 Mbit (32 Kw x 96)	24 Mbit (32 Kw x 48)	12 Mbit (32 Kw x 24)
C	48 Mbit (32 Kw x 96)	24 Mbit (32 Kw x 48)	12 Mbit (32 Kw x 24)
D	16 Mbit (4 Kw x 8 and 32 Kw x 31)	8 Mbit (4 Kw x 8 and 32 Kw x 15)	4 Mbit (4 Kw x 8 and 32 Kw x 7)

Bank	PLI29J Sectors	CE# Control
1A	16 Mbit (4 Kw x 8 and 32 Kw x 31)	CE1#
1B	48 Mbit (32 Kw x 96)	CE1#
2A	48 Mbit (32 Kw x 96)	CE2#
2B	16 Mbit (4 Kw x 8 and 32 Kw x 31)	CE2#

Page Mode Features

The page size is 8 words. After initial page access is accomplished, the page mode operation provides fast read access speed of random locations within that page.

Standard Flash Memory Features

The device requires a **single 3.0 volt power supply** (2.7 V to 3.6 V) for both read and write functions. Internally generated and regulated voltages are provided for the program and erase operations.

The device is entirely command set compatible with the **JEDEC 42.4 single-power-supply Flash standard**. Commands are written to the command register using standard microprocessor write timing. Register contents serve as inputs to an internal state-machine that controls the erase and programming circuitry. Write cycles also internally latch addresses and data needed for the programming and erase operations. Reading data out of the device is similar to reading from other Flash or EPROM devices.

Device programming occurs by executing the program command sequence. The Unlock Bypass mode facilitates faster programming times by requiring only two write cycles to program data instead of four. Device erasure occurs by executing the erase command sequence.

The host system can detect whether a program or erase operation is complete by reading the DQ7 (Data# Polling) and DQ6 (toggle) **status bits**. After a program or erase cycle has been completed, the device is ready to read array data or accept another command.

The sector erase architecture allows memory sectors to be erased and reprogrammed without affecting the data contents of other sectors. The device is fully erased when shipped from the factory.

Hardware data protection measures include a low V_{CC} detector that automatically inhibits write operations during power transitions. The hardware sector protection feature disables both program and erase operations in any combination of sectors of memory. This can be achieved in-system or via programming equipment.

The Erase Suspend/Erase Resume feature enables the user to put erase on hold for any period of time to read data from, or program data to, any sector that is not selected for erasure. True background erase can thus be achieved. If a read is needed from the SecSi Sector area (One Time Program area) after an erase suspend, then the user must use the proper command sequence to enter and exit this region.

The device offers two power-saving features. When addresses have been stable for a specified amount of time, the device enters the **automatic sleep mode**. The system can also place the device into the standby mode. Power consumption is greatly reduced in both these modes.

The device electrically erases all bits within a sector simultaneously via Fowler-Nordheim tunneling. The data is programmed using hot electron injection.

TABLE OF CONTENTS

Notice On Data Sheet Designations 3
- **Advance Information 3**
- Preliminary 3
- Combination 3
- Full Production (No Designation on Document) 3

Simultaneous Read/Write Operation with Zero Latency 4
Page Mode Features 5
Standard Flash Memory Features 5

TABLE OF CONTENTS 7
Ordering Information 10
Product Selector Guide 14
Block Diagram 14
Simultaneous Read/Write Block Diagram 15
Simultaneous Read/Write Block Diagram (PLl29J) 16
Connection Diagrams 17
80-Ball Fine-pitch BGA 17
- Special Package Handling Instructions 17

64-Ball Fine-pitch BGA—MCP Compatible 18
- Special Package Handling Instructions 18

48-Ball Fine-pitch BGA 19
Connection Diagram (PL064J and PL032J) 20
56-pin TSOP 20 x 14 mm Configuration (PLl27J) 21
- Special Package Handling Instructions 21

Pin Description 22
Logic Symbol 22
Device Bus Operations 23
- Table 1. PL127J Device Bus Operations 23
- Table 2. PL129J Device Bus Operations 23

Requirements for Reading Array Data 24
- Random Read (Non-Page Read) 24
- Page Mode Read 24
- Table 3. Page Select 24

Simultaneous Read/Write Operation 25
- Table 4. Bank Select 25

Writing Commands/Command Sequences 25
- Accelerated Program Operation 26
- Autoselect Functions 26

Automatic Sleep Mode 26
RESET#: Hardware Reset Pin 27
Output Disable Mode 27
- Table 5. PL127J Sector Architecture 28
- Table 6. PL064J Sector Architecture 35
- Table 7. PL032J Sector Architecture 38
- Table 8. S29PL129J Sector Architecture 40
- Table 9. SecSiTM Sector Addresses 46

Autoselect Mode 46
- Table 10. Autoselect Codes (High Voltage Method) 47
- Table 11. Autoselect Codes for PL129J 47
- Table 12. PL127J Boot Sector/Sector Block Addresses for Protection/Unprotection 48
- Table 13. PL129J Boot Sector/Sector Block Addresses for Protection/Unprotection 49
- Table 14. PL064J Boot Sector/Sector Block Addresses for Protection/Unprotection 50
- Table 15. PL032J Boot Sector/Sector Block Addresses for Protection/Unprotection 51

Selecting a Sector Protection Mode 51
- Table 16. Sector Protection Schemes 52

Sector Protection 52
Persistent Sector Protection 52
Password Sector Protection 52
WP# Hardware Protection 52
Selecting a Sector Protection Mode 52
Persistent Sector Protection 53
Persistent Protection Bit (PPB) 53
Persistent Protection Bit Lock (PPB Lock) 53
Dynamic Protection Bit (DYB) 53
Persistent Sector Protection Mode Locking Bit 55
Password Protection Mode 55
Password and Password Mode Locking Bit 55
64-bit Password 56
Write Protect (WP#) 56
- Persistent Protection Bit Lock 56

High Voltage Sector Protection 57
- Figure 1. In-System Sector Protection/Sector Unprotection Algorithms 58

Temporary Sector Unprotect 59
- Figure 2. Temporary Sector Unprotect Operation 59

SecSi™ (Secured Silicon) Sector Flash Memory Region 59
- Factory-Locked Area (64 words) 59
- Customer-Lockable Area (64 words) 60
- SecSi Sector Protection Bits 60
- Figure 3. SecSi Sector Protect Verify 61

Hardware Data Protection 61
- Low VCC Write Inhibit 61
- Write Pulse "Glitch" Protection 61
- Logical Inhibit 61
- Power-Up Write Inhibit 61

Common Flash Memory Interface (CFI) 62
- Table 17. CFI Query Identification String 62
- Table 18. System Interface String 63
- Table 19. Device Geometry Definition 63
- Table 20. Primary Vendor-Specific Extended Query 64

Command Definitions 66
Reading Array Data 66
Reset Command 66
Autoselect Command Sequence 67
Enter SecSi™ Sector/Exit SecSi Sector Command Sequence 67
Word Program Command Sequence 67
- Unlock Bypass Command Sequence 68
- Figure 4. Program Operation 69

Chip Erase Command Sequence 69
Sector Erase Command Sequence 70
- Figure 5. Erase Operation 71

Erase Suspend/Erase Resume Commands 71
Command Definitions Tables 73
- Table 21. Memory Array Command Definitions 73
- Table 22. Sector Protection Command Definitions 75

Write Operation Status 76
DQ7: Data# Polling 76
- Figure 6. Data# Polling Algorithm 77

DQ6: Toggle Bit I 78
- Figure 7. Toggle Bit Algorithm 79

DQ2: Toggle Bit II 79
Reading Toggle Bits DQ6/DQ2 79
DQ5: Exceeded Timing Limits 80
DQ3: Sector Erase Timer 80

Table 23. Write Operation Status 81
Absolute Maximum Ratings 82
Figure 8. Maximum Overshoot Waveforms..... 82
Operating Ranges 83
Industrial (I) Devices 83
Extended (E) Devices 83
Supply Voltages 83
DC Characteristics 84
Table 24. CMOS Compatible 84
AC Characteristic 85
Test Conditions 85
Figure 9. Test Setups..... 85
Table 25. Test Specifications 85
SWITCHING WAVEFORMS 86
Table 26. KEY TO SWITCHING WAVEFORMS 86
Figure 10. Input Waveforms and Measurement Levels..... 86
VCC RampRate 86
Read Operations 87
Table 27. Read-Only Operations 87
Figure 11. Read Operation Timings..... 88
Figure 12. Page Read Operation Timings 88
Reset 89
Table 28. Hardware Reset (RESET#) 89
Figure 13. Reset Timings..... 89
Erase/Program Operations 90
Table 29. Erase and Program Operations 90
Timing Diagrams 91
Figure 14. Program Operation Timings 91
Figure 15. Accelerated Program Timing Diagram 91
Figure 16. Chip/Sector Erase Operation Timings..... 92
Figure 17. Back-to-back Read/Write Cycle Timings 92
Figure 18. Data# Polling Timings (During Embedded Algorithms).. 93
Figure 19. Toggle Bit Timings (During Embedded Algorithms).. 93
Figure 20. DQ2 vs. DQ6 94
Protect/Unprotect 94
Table 30. Temporary Sector Unprotect 94
Figure 21. Temporary Sector Unprotect Timing Diagram..... 94
Figure 22. Sector/Sector Block Protect and Unprotect Timing Diagram..... 95
Controlled Erase Operations 96
Table 31. Alternate CE# Controlled Erase and Program Operations 96
Table 32. Alternate CE# Controlled Write (Erase/Program) Operation Timings 97
Table 33. CE1#/CE2# Timing (S29PL129J only) 97
Figure 23. Timing Diagram for Alternating Between CE1# and CE2# Control..... 98
Table 34. Erase And Programming Performance 98
BGA Pin Capacitance 98
Physical Dimensions 99
VBG080—80-Ball Fine-pitch Ball Grid Array 8 x 11 mm Package (PLI27J and PLI29J) 99
VBH064—64-Ball Fine-pitch Ball Grid Array 8 x 11.6 mm package (PLI27J) 100
VBK048—48-Ball Fine-pitch Ball Grid Array 8.15 x 6.15 mm package (PLI27J) 101
TLC056—56-Ball Fine-pitch BGA 7 x 9mm package (PL064J and PL032J) 102
TS056—20 x 14 mm, 56-pin TSOP (PLI27J) 103
Revision Summary 104

Ordering Information

The order number (Valid Combination) is formed by the following:

S29PLI27J 55 BA W 00 0

PACKING TYPE

0 = Tray
1 = Tube
2 = 7″ Tape and Reel
3 = 13″ Tape and Reel

MODEL NUMBER (ADDITIONAL ORDERING OPTIONS)

00 = 3.0V V_{IO}, 80-ball 11 x 8 mm FBGA (VBG080)
01 = 1.8V V_{IO}, 80-ball 11 x 8 mm FBGA (VBG080)
02 = 3.0V V_{IO}, 64-ball 8 x 11.6 mm FBGA (VBH064)
12 = 3.0V V_{IO}, 48-ball 8 x 6 mm FBGA (VBK048)
13 = 3.0V V_{IO}, 56-ball 20 x 14 mm TSOP (TS056)
15 = 3.0V V_{IO}, 56-ball 7 x 9 mm FBGA (TLC056)

TEMPERATURE RANGE

W = Wireless (−25°C to +85°C)
I = Industrial (−40°C to +85°C)

PACKAGE TYPE

BA = Fine-Pitch Grid Array (FBGA)
Lead (Pb)- free compliant
BF = Fine-Pitch Grid Array (FBGA)
Lead (Pb)- free
TA = Thin Small Outline Package (TSOP) Standard Pinout
Lead (Pb)- free compliant
TF = Thin Small Outline Package (TSOP) Standard Pinout
Lead (Pb)- free

CLOCK SPEED

55 = 55 ns (Contact factory for availability)
60 = 60 ns
65 = 65 ns
70 = 70 ns

DEVICE NUMBER/DESCRIPTION

128 Megabit (8 M x 16-Bit), 64 Megabit (4 M x 16-Bit), 32 Megabit (2 M x 16-Bit) CMOS Flash Memory,
Simultaneous Read/Write, Page Mode Flash Memory, 3.0 Volt-only Read, Program, and Erase

Valid Combinations

Valid Combination configuration planned to be supported for this device.

128 Mb Products Based on 110 nm Floating Gate Technology						
Valid FBGA Package Combinations	**Package Marking**	**Temperature**	**Speed**	**V_{IO}**	**CE# Configuration**	**Package Type**
S29PL129J55BAI00	PL129J55BAI00	(-40 - +85 º C)	55 ns (Note)	3.0 V	Dual CE#	11 x 8 mm 80 ball FBGA Standalone Package VBG080
S29PL129J55BAW00	PL129J55BAW00	(-25 - +85 º C)				
S29PL129J60BAI00	PL129J60BAI00	(-40 - +85 º C)	60 ns			
S29PL129J60BAW00	PL129J60BAW00	(-25 - +85 º C)				
S29PL129J70BAI00	PL129J70BAI00	(-40 - +85 º C)	70 ns			
S29PL129J70BAW00	PL129J70BAW00	(-25 - +85 º C)				
S29PL129J65BAI01	PL129J60BAI01	(-40 - +85 º C)	65 ns	1.8 V		
S29PL129J65BAW01	PL129J60BAW01	(-25 - +85 º C)				
S29PL129J70BAI01	PL129J70BAI01	(-40 - +85 º C)	70 ns			
S29PL129J70BAW01	PL129J70BAW01	(-25 - +85 º C)				
S29PL127J55BAI00	PL127J55BAI00	(-40 - +85 º C)	55 ns (Note)	3.0 V	Single CE#	
S29PL127J55BAW00	PL127J55BAW00	(-25 - +85 º C)				
S29PL127J60BAI00	PL127J60BAI00	(-40 - +85 º C)	60 ns			
S29PL127J60BAW00	PL127J60BAW00	(-25 - +85 º C)				
S29PL127J70BAI00	PL127J70BAI00	(-40 - +85 º C)	70 ns			
S29PL127J70BAW00	PL127J70BAW00	(-25 - +85 º C)				
S29PL127J65BAI01	PL127J60BAI01	(-40 - +85 º C)	65 ns	1.8 V		
S29PL127J65BAW01	PL127J60BAW01	(-25 - +85 º C)				
S29PL127J70BAI01	PL127J70BAI01	(-40 - +85 º C)	70 ns			
S29PL127J70BAW01	PL127J70BAW01	(-25 - +85 º C)				
S29PL127J55BAI02	PL127J55BAI02	(-40 - +85 º C)	55 ns (Note)	3.0 V		8 x 11.6 mm 64 ball FBGA MCP-Compatible VBH064
S29PL127J55BAW02	PL127J55BAW02	(-25 - +85 º C)				
S29PL127J60BAI02	PL127J60BAI02	(-40 - +85 º C)	60 ns			
S29PL127J60BAW02	PL127J60BAW02	(-25 - +85 º C)				
S29PL127J70BAI02	PL127J70BAI02	(-40 - +85 º C)	70 ns			
S29PL127J70BAW02	PL127J70BAW02	(-25 - +85 º C)				
S29PL127J55TAI13	PL127J55TAI13	(-40 - +85 º C)	55 (Note)			20 x 14 mm 56-pin TSOP TS056
S29PL127J55TAW13	PL127J55TAW13	(-25 - +85 º C)				
S29PL127J60TAI13	PL127J60TAI13	(-40 - +85 º C)	60			
S29PL127J60TAW13	PL127J60TAW13	(-25 - +85 º C)				
S29PL127J70TAI13	PL127J70TAI13	(-40 - +85 º C)	70			
S29PL127J70TAW13	PL127J70TAW13	(-25 - +85 º C)				
S29PL127J55TFI13	PL127J55TFI13	(-40 - +85 º C)	55 (Note)			
S29PL127J55TFW13	PL127J55TFW13	(-25 - +85 º C)				

128 Mb Products Based on 110 nm Floating Gate Technology						
Valid FBGA Package Combinations	**Package Marking**	**Temperature**	**Speed**	**V_{IO}**	**CE# Configuration**	**Package Type**
S29PL127J60TFI13	S29PL127J60TFI13	(-40 - +85 º C)	60	3.0 V	Single CE#	20 x 14 mm 56-pin TSOP TS056
S29PL127J60TFW13	PL127J60TFW13	(-25 - +85 º C)				
S29PL127J70TFI13	PL127J70TFI13	(-40 - +85 º C)	70			
S29PL127J70TFW13	PL127J70TFW13	(-25 - +85 º C)				

64 Mb Products Based on 110 nm Floating Gate Technology					
Valid Combinations BGA Packages	**Package Marking**	**Temperature**	**Speed**	**VIO**	**Package Type**
S29PL064J55BAI12	PL064J55BAI12	(-40 - +85 º C)	55 ns (Note)	3.0 V	8 x 6 mm 48-ball Standalone Package VBK048
S29PL064J55BAW12	PL064J55BAW12	(-25 - +85 º C)			
S29PL064J60BAI12	PL064J60BAI12	(-40 - +85 º C)	60 ns		
S29PL064J60BAW12	PL064J60BAW12	(-25 - +85 º C)			
S29PL064J70BAI12	PL064J70BAI12	(-40 - +85 º C)	70 ns		
S29PL064J70BAW12	PL064J70BAW12	(-25 - +85 º C)			
S29PL064J55BAI15	PL064J55BAI15	(-40 - +85 º C)	55 ns (Note)	3.0 V	7 x 9 mm 56-ball MCP-Compatible TLC056
S29PL064J55BAW15	PL064J55BAW15	(-25 - +85 º C)			
S29PL064J60BAI15	PL064J60BAI15	(-40 - +85 º C)	60 ns		
S29PL064J60BAW15	PL064J60BAW15	(-25 - +85 º C)			
S29PL064J70BAI15	PL064J70BAI15	(-40 - +85 º C)	70 ns		
S29PL064J70BAW15	PL064J70BAW15	(-25 - +85 º C)			

32 Mb Products Based on 110 nm Floating Gate Technology					
Valid Combinations GA Packages	**Package Marking**	**Temperature**	**Speed**	**VIO**	**Package Type**
S29PL032J55BAI12	PL032J55BAI12	(-40 - +85 º C)	55 ns (Note)	3.0 V	8 x 6 mm 48-ball Standalone Package VBK048
S29PL032J55BAW12	PL032J55BAW12	(-25 - +85 º C)			
S29PL032J60BAI12	PL032J60BAI12	(-40 - +85 º C)	60 ns		
S29PL032J60BAW12	PL032J60BAW12	(-25 - +85 º C)			
S29PL032J70BAI12	PL032J70BAI12	(-40 - +85 º C)	70 ns		
S29PL032J70BAW12	PL032J70BAW12	(-25 - +85 º C)			

32 Mb Products Based on 110 nm Floating Gate Technology					
Valid Combinations GA Packages	**Package Marking**	**Temperature**	**Speed**	**VIO**	**Package Type**
S29PL032J55BAI15	PL032J55BAI15	(-40 - +85 º C)	55 ns (Note)	3.0 V	7 x 9 mm 56-ball MCP-Compatible TLC056
S29PL032J55BAW15	PL032J55BAW15	(-25 - +85 º C)			
S29PL032J60BAI15	PL032J60BAI15	(-40 - +85 º C)	60 ns		
S29PL032J60BAW15	PL032J60BAW15	(-25 - +85 º C)			
S29PL032J70BAI15	PL032J70BAI15	(-40 - +85 º C)	70 ns		
S29PL032J70BAW15	PL032J70BAW15	(-25 - +85 º C)			

Valid Combinations for BGA Packages		
Order Number	**Speed**	**V_{IO} Range**
PL129J, PL127J PL064J, PL032J	55 (Note)	2.7–3.6
PL129J, PL127J PL064J, PL032J	60	
PL129J, PL127J PL064J, PL032J	70	
PL129J, PL127J	65	1.65–1.95
PL129J, PL127J	70	

Note: *Please contact the factory for availability.*

Valid Combinations for BGA Packages		
Order Number	**Speed**	**V_{IO} Range**
PL127J	55	2.7–3.6
	60	
	70	

Product Selector Guide

Part Number		S29PL032J/S29PL064J/S29PLI27J/S29PLI29J					
Speed Option	V_{CC},V_{IO} = 2.7–3.6 V	55 (Note)	60	65			70
	V_{CC} = 2.7–3.6 V, V_{IO} = 1.65–1.95 V (PL127J and PL129J only)				65	70	
Max Access Time, ns (t_{ACC})		55 (Note)	60	25	65	70	70
Max CE# Access, ns (t_{CE})							
Max Page Access, ns (t_{PACC})		20 (Note)	25		25	30	30
Max OE# Access, ns (t_{OE})							

Note: *Contact factory for availability*

Block Diagram

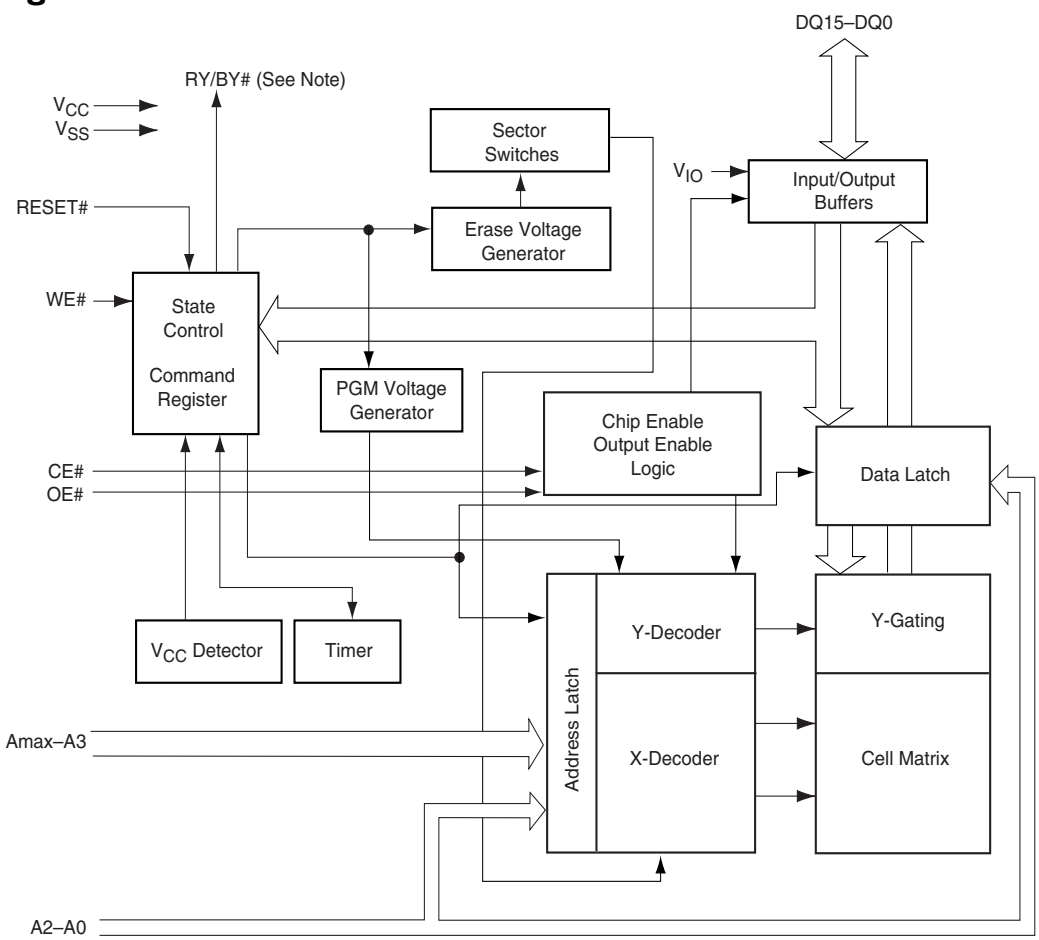

Notes:

1. *RY/BY# is an open drain output.*
2. *Amax = A22 (PL127J), A21 (PL129J and PL064J), A20 (PL032J)*
3. *For PL129J there are two CE# (CE1# and CE2#)*

Simultaneous Read/Write Block Diagram

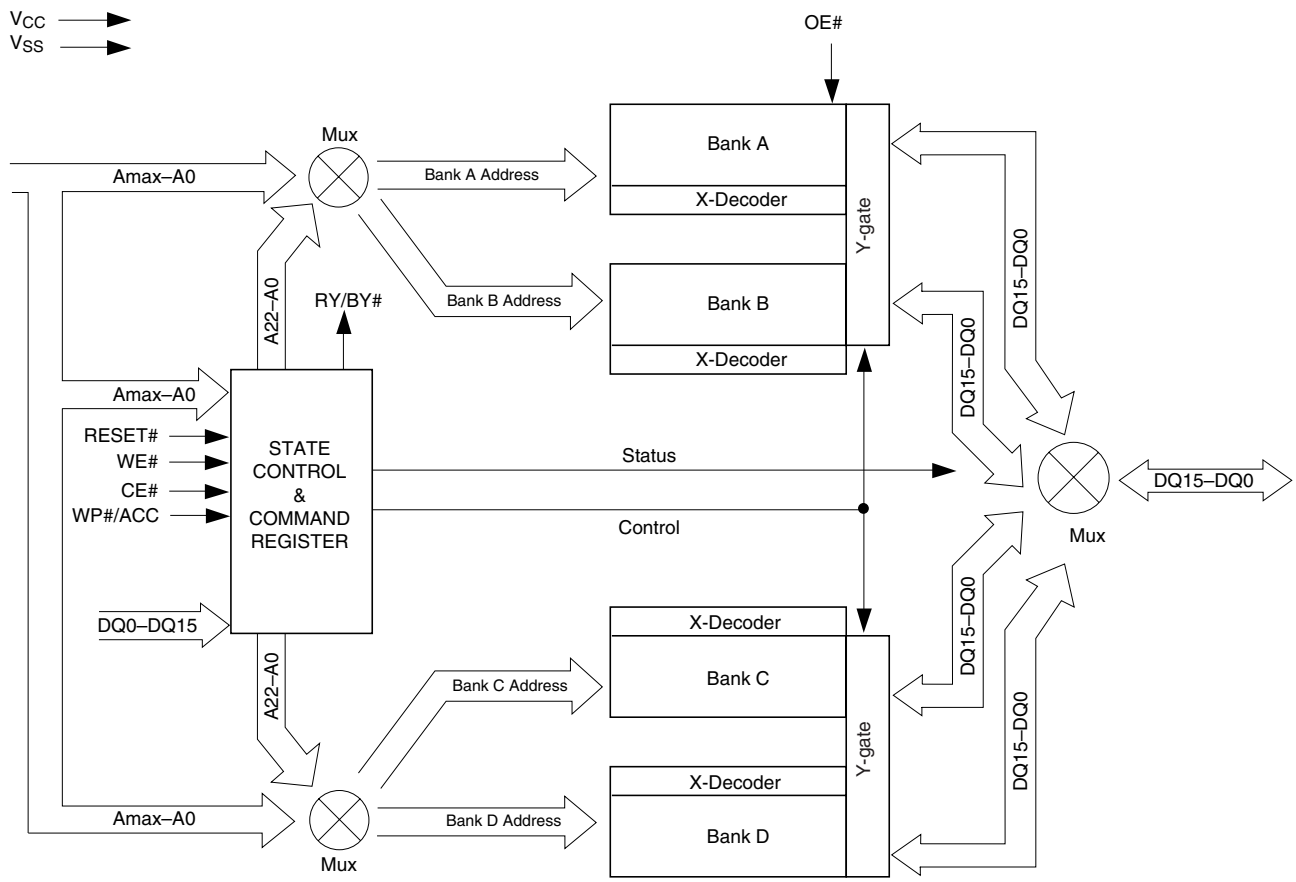

Note: *Amax = A22 (PL127J), A21 (PL064J), A20 (PL032J)*

Simultaneous Read/Write Block Diagram (PLI29J)

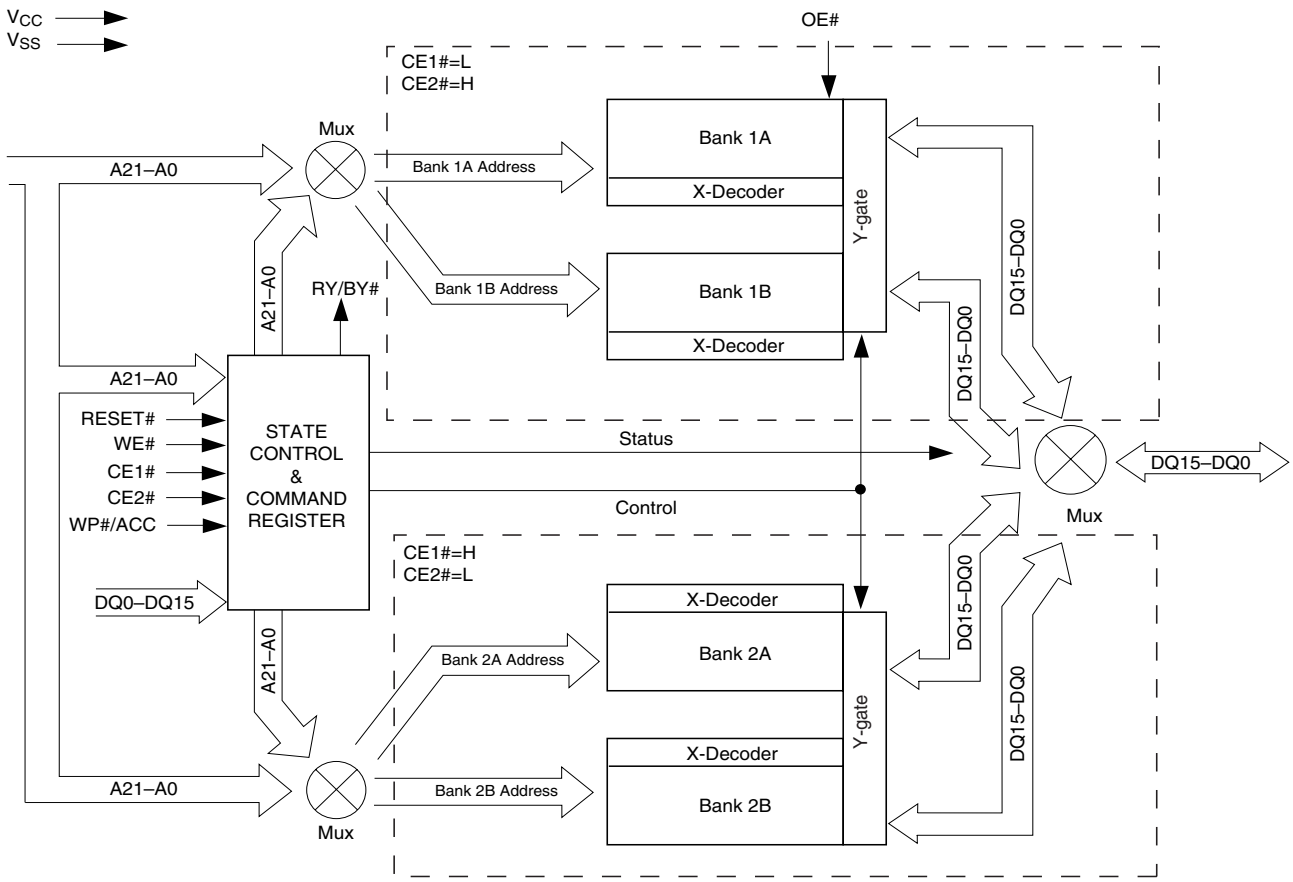

Notes:

1. Amax = A21 (PL129J)

Connection Diagrams

80-Ball Fine-pitch BGA

80-Ball Fine-pitch BGA
(PL127J/PL129J)
Top View, Balls Facing Down

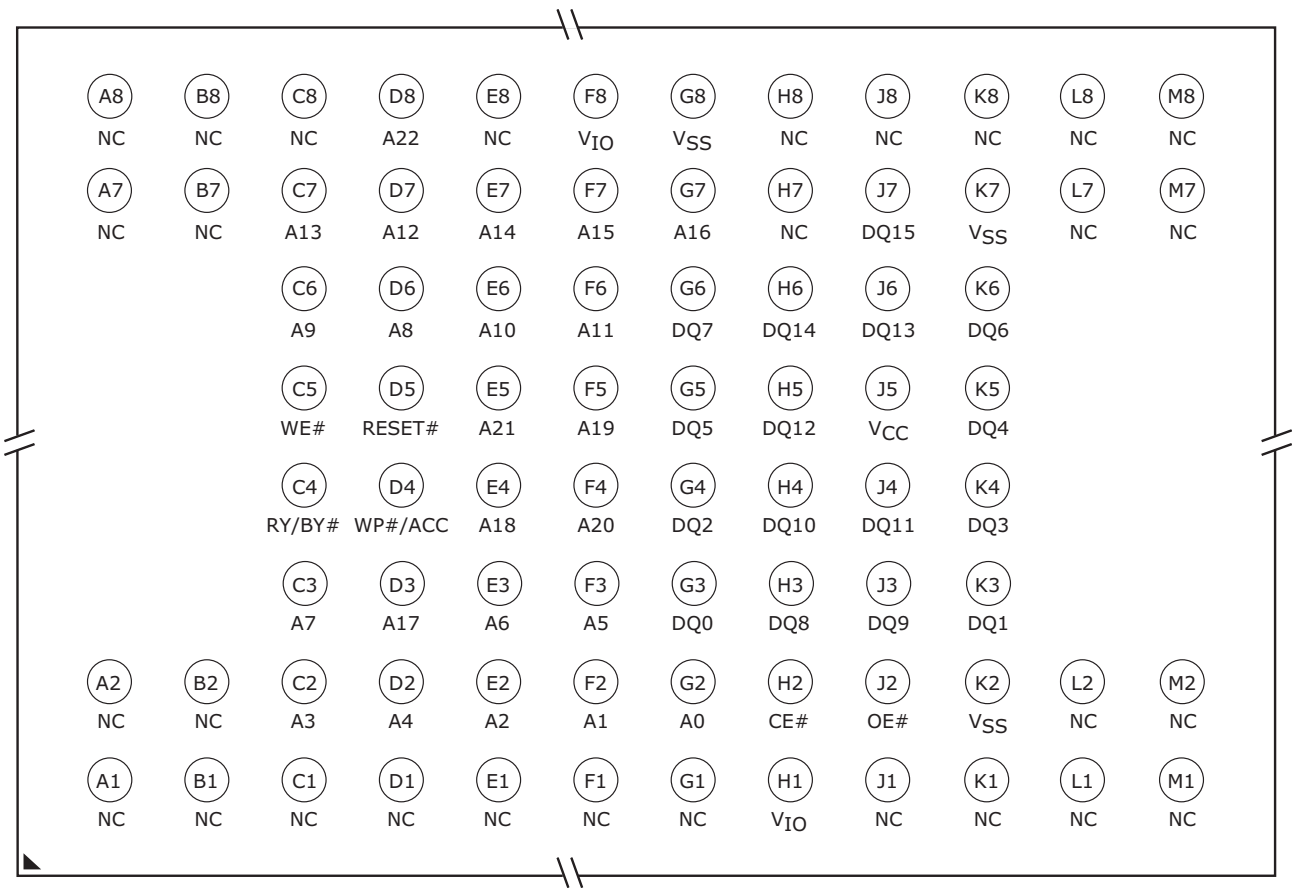

Note: *Pinout shown for PL127J, for PL129J, H7(NC)= CE2# and H2 (CE#) = CE1#*

Special Package Handling Instructions

Special handling is required for Flash Memory products in molded packages (TSOP, BGA, PDIP, SSOP, PLCC).

The package and/or data integrity may be compromised if the package body is exposed to temperatures above 150°C for prolonged periods of time.

64-Ball Fine-pitch BGA—MCP Compatible

64-Ball Fine-pitch BGA—MCP Compatible
(PL127J/PL129J)
Top View, Balls Facing Down

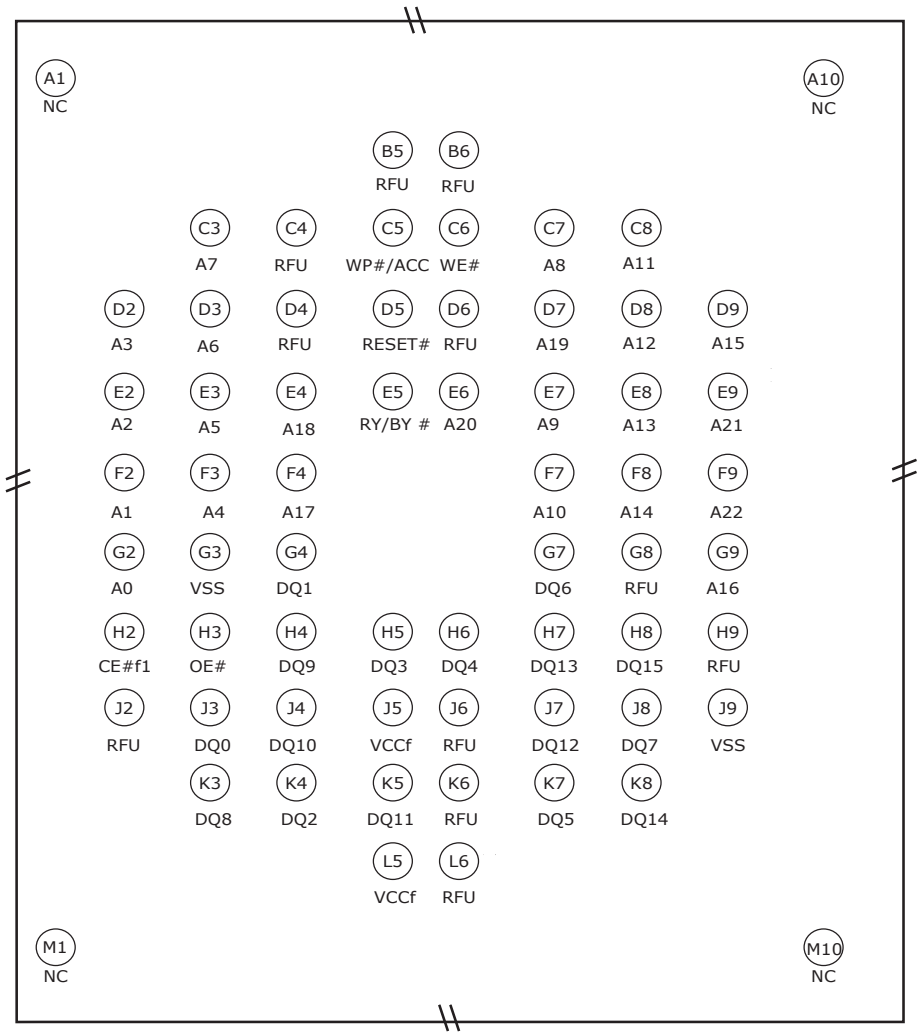

Note: *Pinout shown for PL127J. For PL129J, F9 (A22) = RFU, and B5 (RFU) = CE2#.*

Special Package Handling Instructions

Special handling is required for Flash Memory products in molded packages (TSOP, BGA, PDIP, SSOP, PLCC).

The package and/or data integrity may be compromised if the package body is exposed to temperatures above 150°C for prolonged periods of time.

48-Ball Fine-pitch BGA

48-Ball Fine-pitch BGA (PL064J/PL032J)

Top View, Balls Facing Down

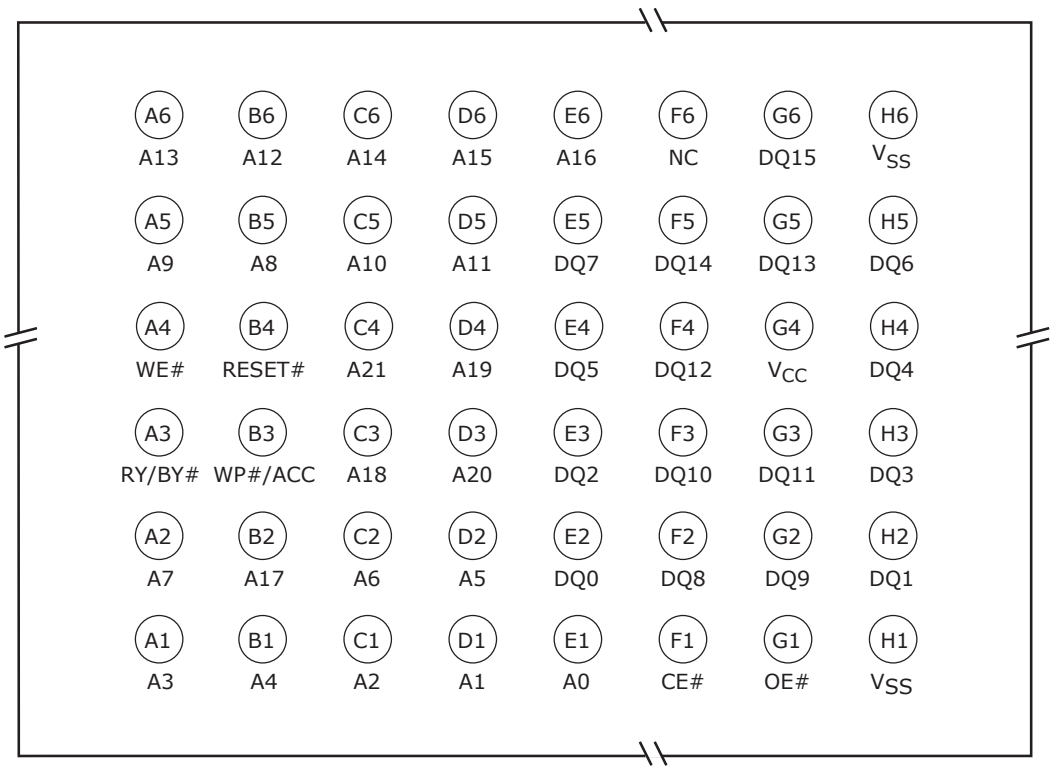

Note: Pinout shows for PL064J. For PL032J, C4(A21) = NC

Connection Diagram (PL064J and PL032J)

56-ball Fine-Pitch Ball Grid Array
(Top View, Balls Facing Down)

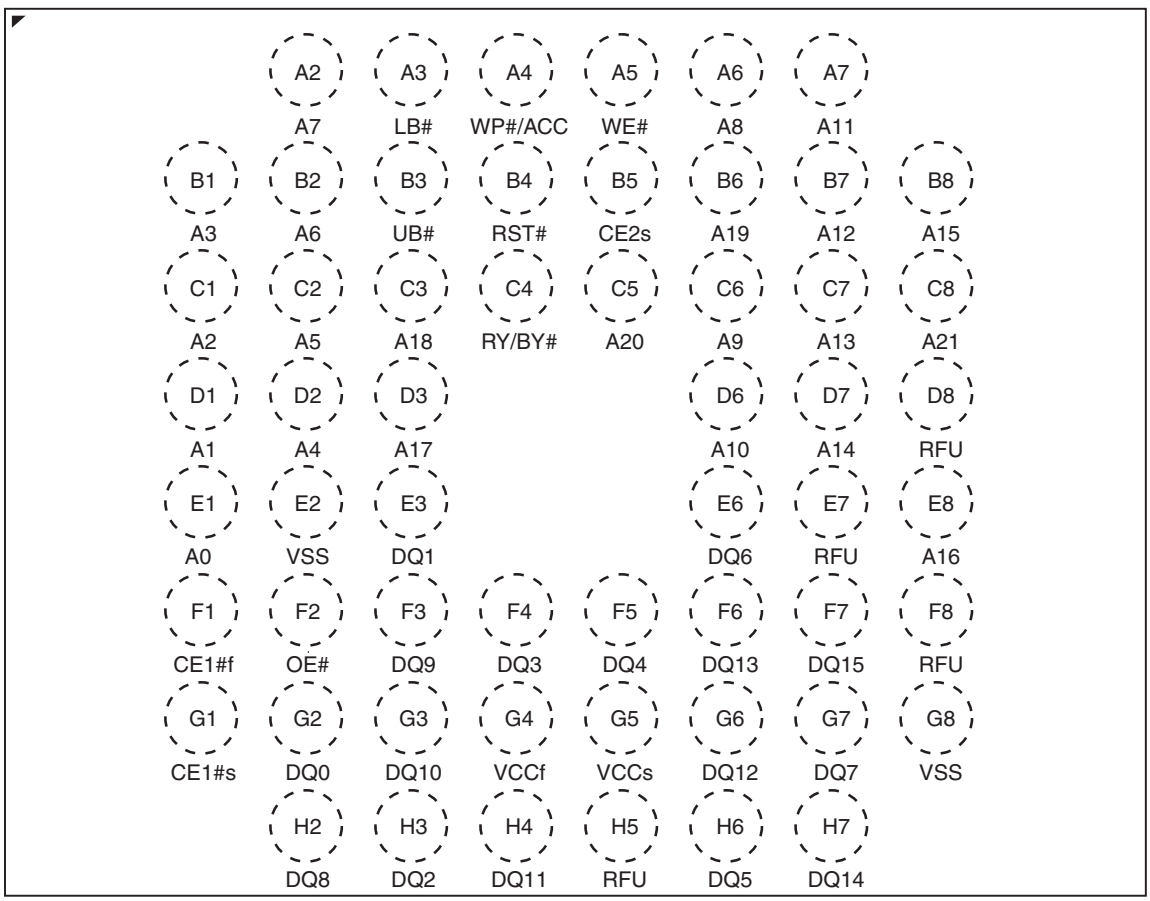

Special Handling Instructions for FBGA Package

Special handling is required for Flash Memory products in FBGA packages.

Flash memory devices in FBGA packages may be damaged if exposed to ultrasonic cleaning methods. The package and/or data integrity may be compromised if the package body is exposed to temperatures above 150°C for prolonged periods of time.

56-pin TSOP 20 x 14 mm Configuration (PLI27J)

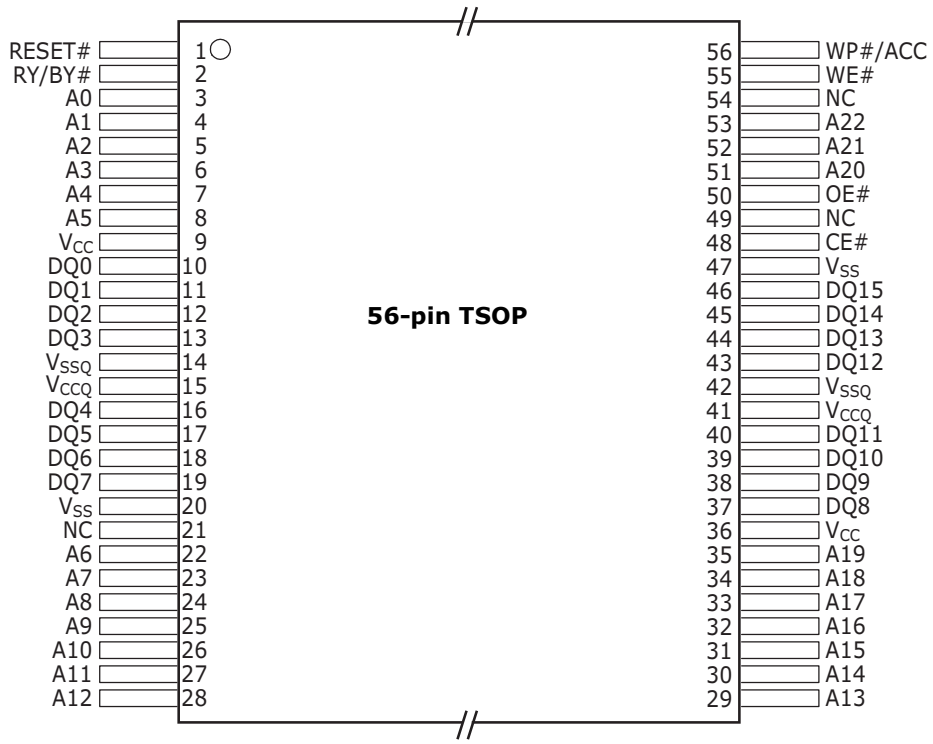

For this family of products, a single multi-chip compatible package is offered for each density to allow both standalone and multi-chip qualification using a single, adaptable package. This new methodology allows package standardization resulting in faster development. The multi-chip compatible package includes all the pins required for standalone device operation and verification. In addition, extra pins are included for insertion of common data storage or logic devices to be used for multi-chip products. If a standalone device is required, the extra multi-chip specific pins are not connected and the standalone device operates normally. The multi-chip compatible package sizes were chosen to serve the largest number of combinations possible. There are only a few cases where a larger package size would be required to accommodate the multi-chip combination. This multi-chip compatible package set does not allow for direct package migration from the Am29BDS128H, Am29BDS128G, Am29BDS640G products, which use legacy standalone packages.

Special Package Handling Instructions

Special handling is required for Flash Memory products in molded packages (TSOP, BGA, PDIP, SSOP, PLCC). The package and/or data integrity may be compromised if the package body is exposed to temperatures above 150°C for prolonged periods of time.

Pin Description

Amax–A0	=	Address bus
DQ15–DQ0	=	16-bit data inputs/outputs/float
CE#	=	Chip Enable Inputs
OE#	=	Output Enable Input
WE#	=	Write Enable
V_{SS}	=	Device Ground
NC	=	Pin Not Connected Internally
RY/BY#	=	Ready/Busy output and open drain. When RY/BY#= V_{IH}, the device is ready to accept read operations and commands. When RY/BY#= V_{OL}, the device is either executing an embedded algorithm or the device is executing a hardware reset operation.
WP#/ACC	=	Write Protect/Acceleration Input. When WP#/ACC= V_{IL}, the highest and lowest two 4K-word sectors are write protected regardless of other sector protection configurations. When WP#/ACC= V_{IH}, these sector are unprotected unless the DYB or PPB is programmed. When WP#/ACC= 12V, program and erase operations are accelerated.
V_{IO}	=	Input/Output Buffer Power Supply (1.65 V to 1.95 V (for PL127J and PL129J) or 2.7 V to 3.6 V (for all PLxxxJ devices))
V_{CC}	=	Chip Power Supply (2.7 V to 3.6 V or 2.7 to 3.3 V)
RESET#	=	Hardware Reset Pin
CE1#, CE2#	=	Chip Enable Inputs. CE1# controls the 64Mb in Banks 1A and 1B. CE2# controls the 64 Mb in Banks 2A and 2B. (Only for PL129J)

Notes:

1. Amax = A22 (PL127J), A21 (PL129J and PL064J), A20 (PL032J)

Logic Symbol

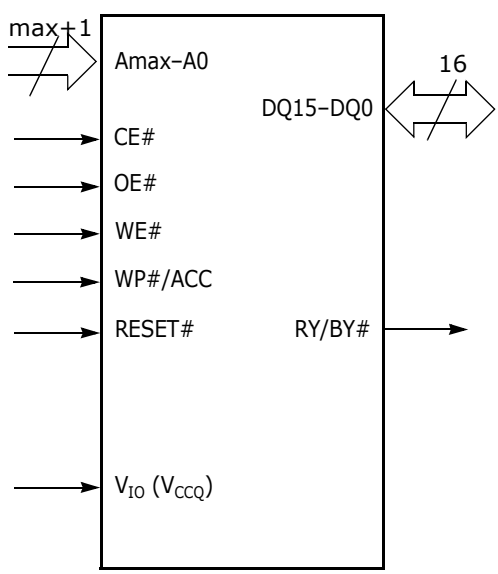

Device Bus Operations

This section describes the requirements and use of the device bus operations, which are initiated through the internal command register. The command register itself does not occupy any addressable memory location. The register is a latch used to store the commands, along with the address and data information needed to execute the command. The contents of the register serve as inputs to the internal state machine. The state machine outputs dictate the function of the device. Table 1 lists the device bus operations, the inputs and control levels they require, and the resulting output. The following subsections describe each of these operations in further detail.

Table 1. PLI27J Device Bus Operations

Operation	CE#	OE#	WE#	RESET#	WP#/ACC	Addresses (Amax–A0)	DQ15–DQ0
Read	L	L	H	H	X	A_{IN}	D_{OUT}
Write	L	H	L	H	X (Note 2)	A_{IN}	D_{IN}
Standby	$V_{IO}\pm$ 0.3 V	X	X	$V_{IO}\pm$ 0.3 V	X (Note 2)	X	High-Z
Output Disable	L	H	H	H	X	X	High-Z
Reset	X	X	X	L	X	X	High-Z
Temporary Sector Unprotect (High Voltage)	X	X	X	V_{ID}	X	A_{IN}	D_{IN}

Table 2. PLI29J Device Bus Operations

Operation	CE1#	CE2#	OE#	WE#	RESET#	WP#/ACC	Addresses (A21–A0)	DQ15–DQ0
Read	L	H	L	H	H	X	A_{IN}	D_{OUT}
	H	L						
Write	L	H	H	L	H	X (Note 2)	A_{IN}	D_{IN}
	H	L						
Standby	$V_{IO}\pm$ 0.3 V	$V_{IO}\pm$ 0.3 V	X	X	$V_{IO}\pm$ 0.3 V	X	X	High-Z
Output Disable	L	L	H	H	H	X	X	High-Z
Reset	X	X	X	X	L	X	X	High-Z
Temporary Sector Unprotect (High Voltage)	X	X	X	X	V_{ID}	X	A_{IN}	D_{IN}

Legend: *L = Logic Low = V_{IL}, H = Logic High = V_{IH}, V_{ID} = 11.5–12.5 V, V_{HH} = 8.5–9.5 V, X = Don't Care, SA = Sector Address, A_{IN} = Address In, D_{IN} = Data In, D_{OUT} = Data Out*

Notes:

1. *The sector protect and sector unprotect functions may also be implemented via programming equipment. See the "High Voltage Sector Protection" section section.*
2. *WP#/ACC must be high when writing to upper two and lower two sectors.*

Requirements for Reading Array Data

To read array data from the outputs, the system must drive the OE# and appropriate CE# pins (For PL129J - CE1#/CE2# pins) to V_{IL}. In PL129J, CE1# and CE2# are the power control and select the lower (CE1#) or upper (CE2#) halves of the device. CE# is the power control. OE# is the output control and gates array data to the output pins. WE# should remain at V_{IH}.

The internal state machine is set for reading array data upon device power-up, or after a hardware reset. This ensures that no spurious alteration of the memory content occurs during the power transition. No command is necessary in this mode to obtain array data. Standard microprocessor read cycles that assert valid addresses on the device address inputs produce valid data on the device data outputs. Each bank remains enabled for read access until the command register contents are altered.

Refer to Table 33 for timing specifications and to Figure 11 for the timing diagram. I_{CC1} in the DC Characteristics table represents the active current specification for reading array data.

Random Read (Non-Page Read)

Address access time (t_{ACC}) is equal to the delay from stable addresses to valid output data. The chip enable access time (t_{CE}) is the delay from the stable addresses and stable CE# to valid data at the output inputs. The output enable access time is the delay from the falling edge of the OE# to valid data at the output inputs (assuming the addresses have been stable for at least t_{ACC}–t_{OE} time).

Page Mode Read

The device is capable of fast page mode read and is compatible with the page mode Mask ROM read operation. This mode provides faster read access speed for random locations within a page. Address bits Amax–A3 select an 8 word page, and address bits A2–A0 select a specific word within that page. This is an asynchronous operation with the microprocessor supplying the specific word location.

The random or initial page access is t_{ACC} or t_{CE} and subsequent page read accesses (as long as the locations specified by the microprocessor falls within that page) is equivalent to t_{PACC}. When CE# (CE1# and CE#2 in PL129J) is deasserted (=V_{IH}), the reassertion of CE# (CE1# or CE#2 in PL129J) for subsequent access has access time of t_{ACC} or t_{CE}. Here again, CE# (CE1# /CE#2 in PL129J)selects the device and OE# is the output control and should be used to gate data to the output inputs if the device is selected. Fast page mode accesses are obtained by keeping Amax–A3 constant and changing A2–A0 to select the specific word within that page.

Table 3. Page Select

Word	A2	AI	A0
Word 0	0	0	0
Word 1	0	0	1
Word 2	0	1	0
Word 3	0	1	1
Word 4	1	0	0
Word 5	1	0	1

Table 3. Page Select (Continued)

Word 6	1	1	0
Word 7	1	1	1

Simultaneous Read/Write Operation

In addition to the conventional features (read, program, erase-suspend read, and erase-suspend program), the device is capable of reading data from one bank of memory while a program or erase operation is in progress in another bank of memory (simultaneous operation). The bank can be selected by bank addresses (PL127J: A22–A20, PL129J and PL064J: A21–A19, PL032J: A20–A18) with zero latency.

The simultaneous operation can execute multi-function mode in the same bank.

Table 4. Bank Select

Bank	PLI27J: A22–A20 PL064J: A2I–AI9 PL032J: A20–AI8
Bank A	000
Bank B	001, 010, 011
Bank C	100, 101, 110
Bank D	111

Bank	CEI#	CE2#	PLI29J: A2I–A20
Bank 1A	0	1	00
Bank 1B	0	1	01, 10, 11
Bank 2A	1	0	00, 01, 10
Bank 2B	1	0	11

Writing Commands/Command Sequences

To write a command or command sequence (which includes programming data to the device and erasing sectors of memory), the system must drive WE# and CE# (CE1# or CE#2 in PL129J) to V_{IL}, and OE# to V_{IH}.

The device features an **Unlock Bypass** mode to facilitate faster programming. Once a bank enters the Unlock Bypass mode, only two write cycles are required to program a word, instead of four. The "Word Program Command Sequence" section has details on programming data to the device using both standard and Unlock Bypass command sequences.

An erase operation can erase one sector, multiple sectors, or the entire device. Table 4 indicates the set of address space that each sector occupies. A "bank address" is the set of address bits required to uniquely select a bank. Similarly, a "sector address" refers to the address bits required to uniquely select a sector. The "Command Definitions" section has details on erasing a sector or the entire chip, or suspending/resuming the erase operation.

I_{CC2} in the DC Characteristics table represents the active current specification for the write mode. See the timing specification tables and timing diagrams in the "Reset" section for write operations.

Accelerated Program Operation

The device offers accelerated program operations through the ACC function. This function is primarily intended to allow faster manufacturing throughput at the factory.

If the system asserts V_{HH} on this pin, the device automatically enters the aforementioned Unlock Bypass mode, temporarily unprotects any protected sectors, and uses the higher voltage on the pin to reduce the time required for program operations. The system would use a two-cycle program command sequence as required by the Unlock Bypass mode. Removing V_{HH} from the WP#/ACC pin returns the device to normal operation. *Note that V_{HH} must not be asserted on WP#/ACC for operations other than accelerated programming, or device damage may result. In addition, the WP#/ACC pin should be raised to V_{CC} when not in use. That is, the WP#/ACC pin should not be left floating or unconnected; inconsistent behavior of the device may result.*

Autoselect Functions

If the system writes the autoselect command sequence, the device enters the autoselect mode. The system can then read autoselect codes from the internal register (which is separate from the memory array) on DQ15–DQ0. Standard read cycle timings apply in this mode. Refer to the "SecSiTM Sector Addresses" section and "Autoselect Command Sequence" section for more information.

Standby Mode

When the system is not reading or writing to the device, it can place the device in the standby mode. In this mode, current consumption is greatly reduced, and the outputs are placed in the high impedance state, independent of the OE# input.

The device enters the CMOS standby mode when the CE# (CE1#,CE#2 in PL129J) and RESET# pins are both held at V_{IO} ± 0.3 V. (Note that this is a more restricted voltage range than V_{IH}.) If CE# (CE1#,CE#2 in PL129J) and RESET# are held at V_{IH}, but not within V_{IO} ± 0.3 V, the device will be in the standby mode, but the standby current will be greater. The device requires standard access time (t_{CE}) for read access when the device is in either of these standby modes, before it is ready to read data.

If the device is deselected during erasure or programming, the device draws active current until the operation is completed.

ICC3 in "DC Characteristics" represents the CMOS standby current specification.

Automatic Sleep Mode

The automatic sleep mode minimizes Flash device energy consumption. The device automatically enables this mode when addresses remain stable for t_{ACC} + 30 ns. The automatic sleep mode is independent of the CE#, WE#, and OE# control signals. Standard address access timings provide new data when addresses are changed. While in sleep mode, output data is latched and always available to the system. Note that during automatic sleep mode, OE# must be at V_{IH} before the device reduces current to the stated sleep mode specification. ICC5 in "DC Characteristics" represents the automatic sleep mode current specification.

RESET#: Hardware Reset Pin

The RESET# pin provides a hardware method of resetting the device to reading array data. When the RESET# pin is driven low for at least a period of t_{RP}, the device immediately terminates any operation in progress, tristates all output pins, and ignores all read/write commands for the duration of the RESET# pulse. The device also resets the internal state machine to reading array data. The operation that was interrupted should be reinitiated once the device is ready to accept another command sequence, to ensure data integrity.

Current is reduced for the duration of the RESET# pulse. When RESET# is held at V_{SS}±0.3 V, the device draws CMOS standby current (ICC4). If RESET# is held at V_{IL} but not within V_{SS}±0.3 V, the standby current will be greater.

The RESET# pin may be tied to the system reset circuitry. A system reset would thus also reset the Flash memory, enabling the system to read the boot-up firmware from the Flash memory.

If RESET# is asserted during a program or erase operation, the RY/BY# pin remains a "0" (busy) until the internal reset operation is complete, which requires a time of t_{READY} (during Embedded Algorithms). The system can thus monitor RY/BY# to determine whether the reset operation is complete. If RESET# is asserted when a program or erase operation is not executing (RY/BY# pin is "1"), the reset operation is completed within a time of t_{READY} (not during Embedded Algorithms). The system can read data t_{RH} after the RESET# pin returns to V_{IH}.

Refer to the "AC Characteristic" section tables for RESET# parameters and to 13 for the timing diagram.

Output Disable Mode

When the OE# input is at V_{IH}, output from the device is disabled. The output pins (except for RY/BY#) are placed in the highest Impedance state

Table 5. PLI27J Sector Architecture

Bank	Sector	Sector Address (A22-A12)	Sector Size (Kwords)	Address Range (x16)
Bank A	SA0	00000000000	4	000000h–000FFFh
	SA1	00000000001	4	001000h–001FFFh
	SA2	00000000010	4	002000h–002FFFh
	SA3	00000000011	4	003000h–003FFFh
	SA4	00000000100	4	004000h–004FFFh
	SA5	00000000101	4	005000h–005FFFh
	SA6	00000000110	4	006000h–006FFFh
	SA7	00000000111	4	007000h–007FFFh
	SA8	00000001XXX	32	008000h–00FFFFh
	SA9	00000010XXX	32	010000h–017FFFh
	SA10	00000011XXX	32	018000h–01FFFFh
	SA11	00000100XXX	32	020000h–027FFFh
	SA12	00000101XXX	32	028000h–02FFFFh
	SA13	00000110XXX	32	030000h–037FFFh
	SA14	00000111XXX	32	038000h–03FFFFh
	SA15	00001000XXX	32	040000h–047FFFh
	SA16	00001001XXX	32	048000h–04FFFFh
	SA17	00001010XXX	32	050000h–057FFFh
	SA18	00001011XXX	32	058000h–05FFFFh
	SA19	00001100XXX	32	060000h–067FFFh
	SA20	00001101XXX	32	068000h–06FFFFh
	SA21	00001110XXX	32	070000h–077FFFh
	SA22	00001111XXX	32	078000h–07FFFFh
	SA23	00010000XXX	32	080000h–087FFFh
	SA24	00010001XXX	32	088000h–08FFFFh
	SA25	00010010XXX	32	090000h–097FFFh
	SA26	00010011XXX	32	098000h–09FFFFh
	SA27	00010100XXX	32	0A0000h–0A7FFFh
	SA28	00010101XXX	32	0A8000h–0AFFFFh
	SA29	00010110XXX	32	0B0000h–0B7FFFh
	SA30	00010111XXX	32	0B8000h–0BFFFFh
	SA31	00011000XXX	32	0C0000h–0C7FFFh
	SA32	00011001XXX	32	0C8000h–0CFFFFh
	SA33	00011010XXX	32	0D0000h–0D7FFFh
	SA34	00011011XXX	32	0D8000h–0DFFFFh
	SA35	00011100XXX	32	0E0000h–0E7FFFh
	SA36	00011101XXX	32	0E8000h–0EFFFFh
	SA37	00011110XXX	32	0F0000h–0F7FFFh
	SA38	00011111XXX	32	0F8000h–0FFFFFh

Table 5. PLI27J Sector Architecture (Continued)

Bank	Sector	Sector Address (A22-AI2)	Sector Size (Kwords)	Address Range (xI6)
Bank B	SA39	00100000XXX	32	100000h–107FFFh
	SA40	00100001XXX	32	108000h–10FFFFh
	SA41	00100010XXX	32	110000h–117FFFh
	SA42	00100011XXX	32	118000h–11FFFFh
	SA43	00100100XXX	32	120000h–127FFFh
	SA44	00100101XXX	32	128000h–12FFFFh
	SA45	00100110XXX	32	130000h–137FFFh
	SA46	00100111XXX	32	138000h–13FFFFh
	SA47	00101000XXX	32	140000h–147FFFh
	SA48	00101001XXX	32	148000h–14FFFFh
	SA49	00101010XXX	32	150000h–157FFFh
	SA50	00101011XXX	32	158000h–15FFFFh
	SA51	00101100XXX	32	160000h–167FFFh
	SA52	00101101XXX	32	168000h–16FFFFh
	SA53	00101110XXX	32	170000h–177FFFh
	SA54	00101111XXX	32	178000h–17FFFFh
	SA55	00110000XXX	32	180000h–187FFFh
	SA56	00110001XXX	32	188000h–18FFFFh
	SA57	00110010XXX	32	190000h–197FFFh
	SA58	00110011XXX	32	198000h–19FFFFh
	SA59	00110100XXX	32	1A0000h–1A7FFFh
	SA60	00110101XXX	32	1A8000h–1AFFFFh
	SA61	00110110XXX	32	1B0000h–1B7FFFh
	SA62	00110111XXX	32	1B8000h–1BFFFFh
	SA63	00111000XXX	32	1C0000h–1C7FFFh
	SA64	00111001XXX	32	1C8000h–1CFFFFh
	SA65	00111010XXX	32	1D0000h–1D7FFFh
	SA66	00111011XXX	32	1D8000h–1DFFFFh
	SA67	00111100XXX	32	1E0000h–1E7FFFh
	SA68	00111101XXX	32	1E8000h–1EFFFFh
	SA69	00111110XXX	32	1F0000h–1F7FFFh
	SA70	00111111XXX	32	1F8000h–1FFFFFh
	SA71	01000000XXX	32	200000h–207FFFh
	SA72	01000001XXX	32	208000h–20FFFFh
	SA73	01000010XXX	32	210000h–217FFFh
	SA74	01000011XXX	32	218000h–21FFFFh
	SA75	01000100XXX	32	220000h–227FFFh
	SA76	01000101XXX	32	228000h–22FFFFh
	SA77	01000110XXX	32	230000h–237FFFh
	SA78	01000111XXX	32	238000h–23FFFFh

Table 5. PLI27J Sector Architecture (Continued)

Bank	Sector	Sector Address (A22-AI2)	Sector Size (Kwords)	Address Range (xI6)
Bank B	SA79	01001000XXX	32	240000h–247FFFh
	SA80	01001001XXX	32	248000h–24FFFFh
	SA81	01001010XXX	32	250000h–257FFFh
	SA82	01001011XXX	32	258000h–25FFFFh
	SA83	01001100XXX	32	260000h–267FFFh
	SA84	01001101XXX	32	268000h–26FFFFh
	SA85	01001110XXX	32	270000h–277FFFh
	SA86	01001111XXX	32	278000h–27FFFFh
	SA87	01010000XXX	32	280000h–287FFFh
	SA88	01010001XXX	32	288000h–28FFFFh
	SA89	01010010XXX	32	290000h–297FFFh
	SA90	01010011XXX	32	298000h–29FFFFh
	SA91	01010100XXX	32	2A0000h–2A7FFFh
	SA92	01010101XXX	32	2A8000h–2AFFFFh
	SA93	01010110XXX	32	2B0000h–2B7FFFh
	SA94	01010111XXX	32	2B8000h–2BFFFFh
	SA95	01011000XXX	32	2C0000h–2C7FFFh
	SA96	01011001XXX	32	2C8000h–2CFFFFh
	SA97	01011010XXX	32	2D0000h–2D7FFFh
	SA98	01011011XXX	32	2D8000h–2DFFFFh
	SA99	01011100XXX	32	2E0000h–2E7FFFh
	SA100	01011101XXX	32	2E8000h–2EFFFFh
	SA101	01011110XXX	32	2F0000h–2F7FFFh
	SA102	01011111XXX	32	2F8000h–2FFFFFh
	SA103	01100000XXX	32	300000h–307FFFh
	SA104	01100001XXX	32	308000h–30FFFFh
	SA105	01100010XXX	32	310000h–317FFFh
	SA106	01100011XXX	32	318000h–31FFFFh
	SA107	01100100XXX	32	320000h–327FFFh
	SA108	01100101XXX	32	328000h–32FFFFh
	SA109	01100110XXX	32	330000h–337FFFh
	SA110	01100111XXX	32	338000h–33FFFFh
	SA111	01101000XXX	32	340000h–347FFFh
	SA112	01101001XXX	32	348000h–34FFFFh
	SA113	01101010XXX	32	350000h–357FFFh
	SA114	01101011XXX	32	358000h–35FFFFh
	SA115	01101100XXX	32	360000h–367FFFh
	SA116	01101101XXX	32	368000h–36FFFFh
	SA117	01101110XXX	32	370000h–377FFFh
	SA118	01101111XXX	32	378000h–37FFFFh

Table 5. PLI27J Sector Architecture (Continued)

Bank	Sector	Sector Address (A22-AI2)	Sector Size (Kwords)	Address Range (xI6)
Bank B	SA119	01110000XXX	32	380000h–387FFFh
	SA120	01110001XXX	32	388000h–38FFFFh
	SA121	01110010XXX	32	390000h–397FFFh
	SA122	01110011XXX	32	398000h–39FFFFh
	SA123	01110100XXX	32	3A0000h–3A7FFFh
	SA124	01110101XXX	32	3A8000h–3AFFFFh
	SA125	01110110XXX	32	3B0000h–3B7FFFh
	SA126	01110111XXX	32	3B8000h–3BFFFFh
	SA127	01111000XXX	32	3C0000h–3C7FFFh
	SA128	01111001XXX	32	3C8000h–3CFFFFh
	SA129	01111010XXX	32	3D0000h–3D7FFFh
	SA130	01111011XXX	32	3D8000h–3DFFFFh
	SA131	01111100XXX	32	3E0000h–3E7FFFh
	SA132	01111101XXX	32	3E8000h–3EFFFFh
	SA133	01111110XXX	32	3F0000h–3F7FFFh
	SA134	01111111XXX	32	3F8000h–3FFFFFh
Bank C	SA135	10000000XXX	32	400000h–407FFFh
	SA136	10000001XXX	32	408000h–40FFFFh
	SA137	10000010XXX	32	410000h–417FFFh
	SA138	10000011XXX	32	418000h–41FFFFh
	SA139	10000100XXX	32	420000h–427FFFh
	SA140	10000101XXX	32	428000h–42FFFFh
	SA141	10000110XXX	32	430000h–437FFFh
	SA142	10000111XXX	32	438000h–43FFFFh
	SA143	10001000XXX	32	440000h–447FFFh
	SA144	10001001XXX	32	448000h–44FFFFh
	SA145	10001010XXX	32	450000h–457FFFh
	SA146	10001011XXX	32	458000h–45FFFFh
	SA147	10001100XXX	32	460000h–467FFFh
	SA148	10001101XXX	32	468000h–46FFFFh
	SA149	10001110XXX	32	470000h–477FFFh
	SA150	10001111XXX	32	478000h–47FFFFh
	SA151	10010000XXX	32	480000h–487FFFh
	SA152	10010001XXX	32	488000h–48FFFFh
	SA153	10010010XXX	32	490000h–497FFFh
	SA154	10010011XXX	32	498000h–49FFFFh
	SA155	10010100XXX	32	4A0000h–4A7FFFh
	SA156	10010101XXX	32	4A8000h–4AFFFFh
	SA157	10010110XXX	32	4B0000h–4B7FFFh
	SA158	10010111XXX	32	4B8000h–4BFFFFh

Table 5. PLI27J Sector Architecture (Continued)

Bank	Sector	Sector Address (A22-AI2)	Sector Size (Kwords)	Address Range (xI6)
Bank C	SA159	10011000XXX	32	4C0000h–4C7FFFh
	SA160	10011001XXX	32	4C8000h–4CFFFFh
	SA161	10011010XXX	32	4D0000h–4D7FFFh
	SA162	10011011XXX	32	4D8000h–4DFFFFh
	SA163	10011100XXX	32	4E0000h–4E7FFFh
	SA164	10011101XXX	32	4E8000h–4EFFFFh
	SA165	10011110XXX	32	4F0000h–4F7FFFh
	SA166	10011111XXX	32	4F8000h–4FFFFFh
	SA167	10100000XXX	32	500000h–507FFFh
	SA168	10100001XXX	32	508000h–50FFFFh
	SA169	10100010XXX	32	510000h–517FFFh
	SA170	10100011XXX	32	518000h–51FFFFh
	SA171	10100100XXX	32	520000h–527FFFh
	SA172	10100101XXX	32	528000h–52FFFFh
	SA173	10100110XXX	32	530000h–537FFFh
	SA174	10100111XXX	32	538000h–53FFFFh
	SA175	10101000XXX	32	540000h–547FFFh
	SA176	10101001XXX	32	548000h–54FFFFh
	SA177	10101010XXX	32	550000h–557FFFh
	SA178	10101011XXX	32	558000h–15FFFFh
	SA179	10101100XXX	32	560000h–567FFFh
	SA180	10101101XXX	32	568000h–56FFFFh
	SA181	10101110XXX	32	570000h–577FFFh
	SA182	10101111XXX	32	578000h–57FFFFh
	SA183	10110000XXX	32	580000h–587FFFh
	SA184	10110001XXX	32	588000h–58FFFFh
	SA185	10110010XXX	32	590000h–597FFFh
	SA186	10110011XXX	32	598000h–59FFFFh
	SA187	10110100XXX	32	5A0000h–5A7FFFh
	SA188	10110101XXX	32	5A8000h–5AFFFFh
	SA189	10110110XXX	32	5B0000h–5B7FFFh
	SA190	10110111XXX	32	5B8000h–5BFFFFh
	SA191	10111000XXX	32	5C0000h–5C7FFFh
	SA192	10111001XXX	32	5C8000h–5CFFFFh
	SA193	10111010XXX	32	5D0000h–5D7FFFh
	SA194	10111011XXX	32	5D8000h–5DFFFFh
	SA195	10111100XXX	32	5E0000h–5E7FFFh
	SA196	10111101XXX	32	5E8000h–5EFFFFh
	SA197	10111110XXX	32	5F0000h–5F7FFFh
	SA198	10111111XXX	32	5F8000h–5FFFFFh

Table 5. PLI27J Sector Architecture (Continued)

Bank	Sector	Sector Address (A22-AI2)	Sector Size (Kwords)	Address Range (xI6)
Bank C	SA199	11000000XXX	32	600000h–607FFFh
	SA200	11000001XXX	32	608000h–60FFFFh
	SA201	11000010XXX	32	610000h–617FFFh
	SA202	11000011XXX	32	618000h–61FFFFh
	SA203	11000100XXX	32	620000h–627FFFh
	SA204	11000101XXX	32	628000h–62FFFFh
	SA205	11000110XXX	32	630000h–637FFFh
	SA206	11000111XXX	32	638000h–63FFFFh
	SA207	11001000XXX	32	640000h–647FFFh
	SA208	11001001XXX	32	648000h–64FFFFh
	SA209	11001010XXX	32	650000h–657FFFh
	SA210	11001011XXX	32	658000h–65FFFFh
	SA211	11001100XXX	32	660000h–667FFFh
	SA212	11001101XXX	32	668000h–66FFFFh
	SA213	11001110XXX	32	670000h–677FFFh
	SA214	11001111XXX	32	678000h–67FFFFh
	SA215	11010000XXX	32	680000h–687FFFh
	SA216	11010001XXX	32	688000h–68FFFFh
	SA217	11010010XXX	32	690000h–697FFFh
	SA218	11010011XXX	32	698000h–69FFFFh
	SA219	11010100XXX	32	6A0000h–6A7FFFh
	SA220	11010101XXX	32	6A8000h–6AFFFFh
	SA221	11010110XXX	32	6B0000h–6B7FFFh
	SA222	11010111XXX	32	6B8000h–6BFFFFh
	SA223	11011000XXX	32	6C0000h–6C7FFFh
	SA224	11011001XXX	32	6C8000h–6CFFFFh
	SA225	11011010XXX	32	6D0000h–6D7FFFh
	SA226	11011011XXX	32	6D8000h–6DFFFFh
	SA227	11011100XXX	32	6E0000h–6E7FFFh
	SA228	11011101XXX	32	6E8000h–6EFFFFh
	SA229	11011110XXX	32	6F0000h–6F7FFFh
	SA230	11011111XXX	32	6F8000h–6FFFFFh

Table 5. PLI27J Sector Architecture (Continued)

Bank	Sector	Sector Address (A22-AI2)	Sector Size (Kwords)	Address Range (xI6)
Bank D	SA231	11100000XXX	32	700000h–707FFFh
	SA232	11100001XXX	32	708000h–70FFFFh
	SA233	11100010XXX	32	710000h–717FFFh
	SA234	11100011XXX	32	718000h–71FFFFh
	SA235	11100100XXX	32	720000h–727FFFh
	SA236	11100101XXX	32	728000h–72FFFFh
	SA237	11100110XXX	32	730000h–737FFFh
	SA238	11100111XXX	32	738000h–73FFFFh
	SA239	11101000XXX	32	740000h–747FFFh
	SA240	11101001XXX	32	748000h–74FFFFh
	SA241	11101010XXX	32	750000h–757FFFh
	SA242	11101011XXX	32	758000h–75FFFFh
	SA243	11101100XXX	32	760000h–767FFFh
	SA244	11101101XXX	32	768000h–76FFFFh
	SA245	11101110XXX	32	770000h–777FFFh
	SA246	11101111XXX	32	778000h–77FFFFh
	SA247	11110000XXX	32	780000h–787FFFh
	SA248	11110001XXX	32	788000h–78FFFFh
	SA249	11110010XXX	32	790000h–797FFFh
	SA250	11110011XXX	32	798000h–79FFFFh
	SA251	11110100XXX	32	7A0000h–7A7FFFh
	SA252	11110101XXX	32	7A8000h–7AFFFFh
	SA253	11110110XXX	32	7B0000h–7B7FFFh
	SA254	11110111XXX	32	7B8000h–7BFFFFh
	SA255	11111000XXX	32	7C0000h–7C7FFFh
	SA256	11111001XXX	32	7C8000h–7CFFFFh
	SA257	11111010XXX	32	7D0000h–7D7FFFh
	SA258	11111011XXX	32	7D8000h–7DFFFFh
	SA259	11111100XXX	32	7E0000h–7E7FFFh
	SA260	11111101XXX	32	7E8000h–7EFFFFh
	SA261	11111110XXX	32	7F0000h–7F7FFFh
	SA262	11111111000	4	7F8000h–7F8FFFh
	SA263	11111111001	4	7F9000h–7F9FFFh
	SA264	11111111010	4	7FA000h–7FAFFFh
	SA265	11111111011	4	7FB000h–7FBFFFh
	SA266	11111111100	4	7FC000h–7FCFFFh
	SA267	11111111101	4	7FD000h–7FDFFFh
	SA268	11111111110	4	7FE000h–7FEFFFh
	SA269	11111111111	4	7FF000h–7FFFFFh

Table 6. PL064J Sector Architecture

Bank	Sector	Sector Address (A22-AI2)	Sector Size (Kwords)	Address Range (xI6)
Bank A	SA0	0000000000	4	000000h–000FFFh
	SA1	0000000001	4	001000h–001FFFh
	SA2	0000000010	4	002000h–002FFFh
	SA3	0000000011	4	003000h–003FFFh
	SA4	0000000100	4	004000h–004FFFh
	SA5	0000000101	4	005000h–005FFFh
	SA6	0000000110	4	006000h–006FFFh
	SA7	0000000111	4	007000h–007FFFh
	SA8	0000001XXX	32	008000h–00FFFFh
	SA9	0000010XXX	32	010000h–017FFFh
	SA10	0000011XXX	32	018000h–01FFFFh
	SA11	0000100XXX	32	020000h–027FFFh
	SA12	0000101XXX	32	028000h–02FFFFh
	SA13	0000110XXX	32	030000h–037FFFh
	SA14	0000111XXX	32	038000h–03FFFFh
	SA15	0001000XXX	32	040000h–047FFFh
	SA16	0001001XXX	32	048000h–04FFFFh
	SA17	0001010XXX	32	050000h–057FFFh
	SA18	0001011XXX	32	058000h–05FFFFh
	SA19	0001100XXX	32	060000h–067FFFh
	SA20	0001101XXX	32	068000h–06FFFFh
	SA21	0001110XXX	32	070000h–077FFFh
	SA22	0001111XXX	32	078000h–07FFFFh
Bank B	SA23	0010000XXX	32	080000h–087FFFh
	SA24	0010001XXX	32	088000h–08FFFFh
	SA25	0010010XXX	32	090000h–097FFFh
	SA26	0010011XXX	32	098000h–09FFFFh
	SA27	0010100XXX	32	0A0000h–0A7FFFh
	SA28	0010101XXX	32	0A8000h–0AFFFFh
	SA29	0010110XXX	32	0B0000h–0B7FFFh
	SA30	0010111XXX	32	0B8000h–0BFFFFh
	SA31	0011000XXX	32	0C0000h–0C7FFFh
	SA32	0011001XXX	32	0C8000h–0CFFFFh
	SA33	0011010XXX	32	0D0000h–0D7FFFh
	SA34	0011011XXX	32	0D8000h–0DFFFFh
	SA35	0011100XXX	32	0E0000h–0E7FFFh
	SA36	0011101XXX	32	0E8000h–0EFFFFh
	SA37	0011110XXX	32	0F0000h–0F7FFFh
	SA38	0011111XXX	32	0F8000h–0FFFFFh
	SA39	0100000XXX	32	100000h–107FFFh
	SA40	0100001XXX	32	108000h–10FFFFh
	SA41	0100010XXX	32	110000h–117FFFh
	SA42	0100011XXX	32	118000h–11FFFFh
	SA43	0100100XXX	32	120000h–127FFFh
	SA44	0100101XXX	32	128000h–12FFFFh
	SA45	0100110XXX	32	130000h–137FFFh
	SA46	0100111XXX	32	138000h–13FFFFh
	SA47	0101000XXX	32	140000h–147FFFh

Table 6. PL064J Sector Architecture (Continued)

Bank	Sector	Sector Address (A22-A12)	Sector Size (Kwords)	Address Range (x16)
Bank B	SA48	0101001XXX	32	148000h–14FFFFh
	SA49	0101010XXX	32	150000h–157FFFh
	SA50	0101011XXX	32	158000h–15FFFFh
	SA51	0101100XXX	32	160000h–167FFFh
	SA52	0101101XXX	32	168000h–16FFFFh
	SA53	0101110XXX	32	170000h–177FFFh
	SA54	0101111XXX	32	178000h–17FFFFh
	SA55	0110000XXX	32	180000h–187FFFh
	SA56	0110001XXX	32	188000h–18FFFFh
	SA57	0110010XXX	32	190000h–197FFFh
	SA58	0110011XXX	32	198000h–19FFFFh
	SA59	0110100XXX	32	1A0000h–1A7FFFh
	SA60	0110101XXX	32	1A8000h–1AFFFFh
	SA61	0110110XXX	32	1B0000h–1B7FFFh
	SA62	0110111XXX	32	1B8000h–1BFFFFh
	SA63	0111000XXX	32	1C0000h–1C7FFFh
	SA64	0111001XXX	32	1C8000h–1CFFFFh
	SA65	0111010XXX	32	1D0000h–1D7FFFh
	SA66	0111011XXX	32	1D8000h–1DFFFFh
	SA67	0111100XXX	32	1E0000h–1E7FFFh
	SA68	0111101XXX	32	1E8000h–1EFFFFh
	SA69	0111110XXX	32	1F0000h–1F7FFFh
	SA70	0111111XXX	32	1F8000h–1FFFFFh
Bank C	SA71	1000000XXX	32	200000h–207FFFh
	SA72	1000001XXX	32	208000h–20FFFFh
	SA73	1000010XXX	32	210000h–217FFFh
	SA74	1000011XXX	32	218000h–21FFFFh
	SA75	1000100XXX	32	220000h–227FFFh
	SA76	1000101XXX	32	228000h–22FFFFh
	SA77	1000110XXX	32	230000h–237FFFh
	SA78	1000111XXX	32	238000h–23FFFFh
	SA79	1001000XXX	32	240000h–247FFFh
	SA80	1001001XXX	32	248000h–24FFFFh
	SA81	1001010XXX	32	250000h–257FFFh
	SA82	1001011XXX	32	258000h–25FFFFh
	SA83	1001100XXX	32	260000h–267FFFh
	SA84	1001101XXX	32	268000h–26FFFFh
	SA85	1001110XXX	32	270000h–277FFFh
	SA86	1001111XXX	32	278000h–27FFFFh
Bank C	SA87	1010000XXX	32	280000h–287FFFh
	SA88	1010001XXX	32	288000h–28FFFFh
	SA89	1010010XXX	32	290000h–297FFFh
	SA90	1010011XXX	32	298000h–29FFFFh
	SA91	1010100XXX	32	2A0000h–2A7FFFh
	SA92	1010101XXX	32	2A8000h–2AFFFFh
	SA93	1010110XXX	32	2B0000h–2B7FFFh
	SA94	1010111XXX	32	2B8000h–2BFFFFh
	SA95	1011000XXX	32	2C0000h–2C7FFFh

Table 6. PL064J Sector Architecture (Continued)

Bank	Sector	Sector Address (A22-A12)	Sector Size (Kwords)	Address Range (x16)
Bank C	SA96	1011001XXX	32	2C8000h–2CFFFFh
	SA97	1011010XXX	32	2D0000h–2D7FFFh
	SA98	1011011XXX	32	2D8000h–2DFFFFh
	SA99	1011100XXX	32	2E0000h–2E7FFFh
	SA100	1011101XXX	32	2E8000h–2EFFFFh
	SA101	1011110XXX	32	2F0000h–2F7FFFh
	SA102	1011111XXX	32	2F8000h–2FFFFFh
	SA103	1100000XXX	32	300000h–307FFFh
	SA104	1100001XXX	32	308000h–30FFFFh
	SA105	1100010XXX	32	310000h–317FFFh
	SA106	1100011XXX	32	318000h–31FFFFh
	SA107	1100100XXX	32	320000h–327FFFh
	SA108	1100101XXX	32	328000h–32FFFFh
	SA109	1100110XXX	32	330000h–337FFFh
	SA110	1100111XXX	32	338000h–33FFFFh
	SA111	1101000XXX	32	340000h–347FFFh
	SA112	1101001XXX	32	348000h–34FFFFh
	SA113	1101010XXX	32	350000h–357FFFh
	SA114	1101011XXX	32	358000h–35FFFFh
	SA115	1101100XXX	32	360000h–367FFFh
	SA116	1101101XXX	32	368000h–36FFFFh
	SA117	1101110XXX	32	370000h–377FFFh
	SA118	1101111XXX	32	378000h–37FFFFh
Bank D	SA119	1110000XXX	32	380000h–387FFFh
	SA120	1110001XXX	32	388000h–38FFFFh
	SA121	1110010XXX	32	390000h–397FFFh
	SA122	1110011XXX	32	398000h–39FFFFh
	SA123	1110100XXX	32	3A0000h–3A7FFFh
	SA124	1110101XXX	32	3A8000h–3AFFFFh
	SA125	1110110XXX	32	3B0000h–3B7FFFh
	SA126	1110111XXX	32	3B8000h–3BFFFFh
	SA127	1111000XXX	32	3C0000h–3C7FFFh
	SA128	1111001XXX	32	3C8000h–3CFFFFh
	SA129	1111010XXX	32	3D0000h–3D7FFFh
	SA130	1111011XXX	32	3D8000h–3DFFFFh
	SA131	1111100XXX	32	3E0000h–3E7FFFh
	SA132	1111101XXX	32	3E8000h–3EFFFFh
	SA133	1111110XXX	32	3F0000h–3F7FFFh
	SA134	1111111000	4	3F8000h–3F8FFFh
	SA135	1111111001	4	3F9000h–3F9FFFh
	SA136	1111111010	4	3FA000h–3FAFFFh
	SA137	1111111011	4	3FB000h–3FBFFFh
	SA138	1111111100	4	3FC000h–3FCFFFh
	SA139	1111111101	4	3FD000h–3FDFFFh
	SA140	1111111110	4	3FE000h–3FEFFFh
	SA141	1111111111	4	3FF000h–3FFFFFh

Table 7. PL032J Sector Architecture

Bank	Sector	Sector Address (A22-AI2)	Sector Size (Kwords)	Address Range (x16)
Bank A	SA0	000000000	4	000000h–000FFFh
	SA1	000000001	4	001000h–001FFFh
	SA2	000000010	4	002000h–002FFFh
	SA3	000000011	4	003000h–003FFFh
	SA4	000000100	4	004000h–004FFFh
	SA5	000000101	4	005000h–005FFFh
	SA6	000000110	4	006000h–006FFFh
	SA7	000000111	4	007000h–007FFFh
	SA8	000001XXX	32	008000h–00FFFFh
	SA9	000010XXX	32	010000h–017FFFh
	SA10	000011XXX	32	018000h–01FFFFh
	SA11	000100XXX	32	020000h–027FFFh
	SA12	000101XXX	32	028000h–02FFFFh
	SA13	000110XXX	32	030000h–037FFFh
	SA14	000111XXX	32	038000h–03FFFFh
Bank B	SA15	001000XXX	32	040000h–047FFFh
	SA16	001001XXX	32	048000h–04FFFFh
	SA17	001010XXX	32	050000h–057FFFh
	SA18	001011XXX	32	058000h–05FFFFh
	SA19	001100XXX	32	060000h–067FFFh
	SA20	001101XXX	32	068000h–06FFFFh
	SA21	001110XXX	32	070000h–077FFFh
	SA22	001111XXX	32	078000h–07FFFFh
	SA23	010000XXX	32	080000h–087FFFh
	SA24	010001XXX	32	088000h–08FFFFh
	SA25	010010XXX	32	090000h–097FFFh
	SA26	010011XXX	32	098000h–09FFFFh
	SA27	010100XXX	32	0A0000h–0A7FFFh
	SA28	010101XXX	32	0A8000h–0AFFFFh
	SA29	010110XXX	32	0B0000h–0B7FFFh
	SA30	010111XXX	32	0B8000h–0BFFFFh
	SA31	011000XXX	32	0C0000h–0C7FFFh
	SA32	011001XXX	32	0C8000h–0CFFFFh
	SA33	011010XXX	32	0D0000h–0D7FFFh
	SA34	011011XXX	32	0D8000h–0DFFFFh
	SA35	011100XXX	32	0E0000h–0E7FFFh
	SA36	011101XXX	32	0E8000h–0EFFFFh
	SA37	011110XXX	32	0F0000h–0F7FFFh
	SA38	011111XXX	32	0F8000h–0FFFFFh

Table 7. PL032J Sector Architecture (Continued)

Bank	Sector	Sector Address (A22-AI2)	Sector Size (Kwords)	Address Range (xI6)
Bank C	SA39	100000XXX	32	100000h–107FFFh
	SA40	100001XXX	32	108000h–10FFFFh
	SA41	100010XXX	32	110000h–117FFFh
	SA42	100011XXX	32	118000h–11FFFFh
	SA43	100100XXX	32	120000h–127FFFh
	SA44	100101XXX	32	128000h–12FFFFh
	SA45	100110XXX	32	130000h–137FFFh
	SA46	100111XXX	32	138000h–13FFFFh
	SA47	101000XXX	32	140000h–147FFFh
	SA48	101001XXX	32	148000h–14FFFFh
	SA49	101010XXX	32	150000h–157FFFh
	SA50	101011XXX	32	158000h–15FFFFh
	SA51	101100XXX	32	160000h–167FFFh
	SA52	101101XXX	32	168000h–16FFFFh
	SA53	101110XXX	32	170000h–177FFFh
	SA54	101111XXX	32	178000h–17FFFFh
	SA55	110000XXX	32	180000h–187FFFh
	SA56	110001XXX	32	188000h–18FFFFh
	SA57	110010XXX	32	190000h–197FFFh
	SA58	110011XXX	32	198000h–19FFFFh
	SA59	110100XXX	32	1A0000h–1A7FFFh
	SA60	110101XXX	32	1A8000h–1AFFFFh
	SA61	110110XXX	32	1B0000h–1B7FFFh
	SA62	110111XXX	32	1B8000h–1BFFFFh
Bank D	SA63	111000XXX	32	1C0000h–1C7FFFh
	SA64	111001XXX	32	1C8000h–1CFFFFh
	SA65	111010XXX	32	1D0000h–1D7FFFh
	SA66	111011XXX	32	1D8000h–1DFFFFh
	SA67	111100XXX	32	1E0000h–1E7FFFh
	SA68	111101XXX	32	1E8000h–1EFFFFh
	SA69	111110XXX	32	1F0000h–1F7FFFh
	SA70	111111000	4	1F8000h–1F8FFFh
	SA71	111111001	4	1F9000h–1F9FFFh
	SA72	111111010	4	1FA000h–1FAFFFh
	SA73	111111011	4	1FB000h–1FBFFFh
	SA74	111111100	4	1FC000h–1FCFFFh
	SA75	111111101	4	1FD000h–1FDFFFh
	SA76	111111110	4	1FE000h–1FEFFFh
	SA77	111111111	4	1FF000h–1FFFFFh

Table 8. S29PLI29J Sector Architecture

Bank	Sector	CEI#	CE2#	Sector Address (A2I-AI2)	Sector Size (Kwords)	Address Range (x16)
Bank 1A	SA1-0	0	1	0000000000	4	000000h–000FFFh
	SA1-1	0	1	0000000001	4	001000h–001FFFh
	SA1-2	0	1	0000000010	4	002000h–002FFFh
	SA1-3	0	1	0000000011	4	003000h–003FFFh
	SA1-4	0	1	0000000100	4	004000h–004FFFh
	SA1-5	0	1	0000000101	4	005000h–005FFFh
	SA1-6	0	1	0000000110	4	006000h–006FFFh
	SA1-7	0	1	0000000111	4	007000h–007FFFh
	SA1-8	0	1	0000001XXX	32	008000h–00FFFFh
	SA1-9	0	1	0000010XXX	32	010000h–017FFFh
	SA1-10	0	1	0000011XXX	32	018000h–01FFFFh
	SA1-11	0	1	0000100XXX	32	020000h–027FFFh
	SA1-12	0	1	0000101XXX	32	028000h–02FFFFh
	SA1-13	0	1	0000110XXX	32	030000h–037FFFh
	SA1-14	0	1	0000111XXX	32	038000h–03FFFFh
	SA1-15	0	1	0001000XXX	32	040000h–047FFFh
	SA1-16	0	1	0001001XXX	32	048000h–04FFFFh
	SA1-17	0	1	0001010XXX	32	050000h–057FFFh
	SA1-18	0	1	0001011XXX	32	058000h–05FFFFh
	SA1-19	0	1	0001100XXX	32	060000h–067FFFh
	SA1-20	0	1	0001101XXX	32	068000h–06FFFFh
	SA1-21	0	1	0001110XXX	32	070000h–077FFFh
	SA1-22	0	1	0001111XXX	32	078000h–07FFFFh
	SA1-23	0	1	0010000XXX	32	080000h–087FFFh
	SA1-24	0	1	0010001XXX	32	088000h–08FFFFh
	SA1-25	0	1	0010010XXX	32	090000h–097FFFh
	SA1-26	0	1	0010011XXX	32	098000h–09FFFFh
	SA1-27	0	1	0010100XXX	32	0A0000h–0A7FFFh
	SA1-28	0	1	0010101XXX	32	0A8000h–0AFFFFh
	SA1-29	0	1	0010110XXX	32	0B0000h–0B7FFFh
	SA1-30	0	1	0010111XXX	32	0B8000h–0BFFFFh
	SA1-31	0	1	0011000XXX	32	0C0000h–0C7FFFh
	SA1-32	0	1	0011001XXX	32	0C8000h–0CFFFFh
	SA1-33	0	1	0011010XXX	32	0D0000h–0D7FFFh
	SA1-34	0	1	0011011XXX	32	0D8000h–0DFFFFh
	SA1-35	0	1	0011100XXX	32	0E0000h–0E7FFFh
	SA1-36	0	1	0011101XXX	32	0E8000h–0EFFFFh
	SA1-37	0	1	0011110XXX	32	0F0000h–0F7FFFh
	SA1-38	0	1	0011111XXX	32	0F8000h–0FFFFFh

Table 8. S29PLI29J Sector Architecture (Continued)

Bank	Sector	CEI#	CE2#	Sector Address (A2I-AI2)	Sector Size (Kwords)	Address Range (xI6)
Bank 1B	SA1-39	0	1	0100000XXX	32	100000h–107FFFh
	SA1-40	0	1	0100001XXX	32	108000h–10FFFFh
	SA1-41	0	1	0100010XXX	32	110000h–117FFFh
	SA1-42	0	1	0100011XXX	32	118000h–11FFFFh
	SA1-43	0	1	0100100XXX	32	120000h–127FFFh
	SA1-44	0	1	0100101XXX	32	128000h–12FFFFh
	SA1-45	0	1	0100110XXX	32	130000h–137FFFh
	SA1-46	0	1	0100111XXX	32	138000h–13FFFFh
	SA1-47	0	1	0101000XXX	32	140000h–147FFFh
	SA1-48	0	1	0101001XXX	32	148000h–14FFFFh
	SA1-49	0	1	0101010XXX	32	150000h–157FFFh
	SA1-50	0	1	0101011XXX	32	158000h–15FFFFh
	SA1-51	0	1	0101100XXX	32	160000h–167FFFh
	SA1-52	0	1	0101101XXX	32	168000h–16FFFFh
	SA1-53	0	1	0101110XXX	32	170000h–177FFFh
	SA1-54	0	1	0101111XXX	32	178000h–17FFFFh
	SA1-55	0	1	0110000XXX	32	180000h–187FFFh
	SA1-56	0	1	0110001XXX	32	188000h–18FFFFh
	SA1-57	0	1	0110010XXX	32	190000h–197FFFh
	SA1-58	0	1	0110011XXX	32	198000h–19FFFFh
	SA1-59	0	1	0110100XXX	32	1A0000h–1A7FFFh
	SA1-60	0	1	0110101XXX	32	1A8000h–1AFFFFh
	SA1-61	0	1	0110110XXX	32	1B0000h–1B7FFFh
	SA1-62	0	1	0110111XXX	32	1B8000h–1BFFFFh
	SA1-63	0	1	0111000XXX	32	1C0000h–1C7FFFh
	SA1-64	0	1	0111001XXX	32	1C8000h–1CFFFFh
	SA1-65	0	1	0111010XXX	32	1D0000h–1D7FFFh
	SA1-66	0	1	0111011XXX	32	1D8000h–1DFFFFh
	SA1-67	0	1	0111100XXX	32	1E0000h–1E7FFFh
	SA1-68	0	1	0111101XXX	32	1E8000h–1EFFFFh
	SA1-69	0	1	0111110XXX	32	1F0000h–1F7FFFh
	SA1-70	0	1	0111111XXX	32	1F8000h–1FFFFFh
	SA1-71	0	1	1000000XXX	32	200000h–207FFFh
	SA1-72	0	1	1000001XXX	32	208000h–20FFFFh
	SA1-73	0	1	1000010XXX	32	210000h–217FFFh
	SA1-74	0	1	1000011XXX	32	218000h–21FFFFh
	SA1-75	0	1	1000100XXX	32	220000h–227FFFh
	SA1-76	0	1	1000101XXX	32	228000h–22FFFFh
	SA1-77	0	1	1000110XXX	32	230000h–237FFFh
	SA1-78	0	1	1000111XXX	32	238000h–23FFFFh
	SA1-79	0	1	1001000XXX	32	240000h–247FFFh
	SA1-80	0	1	1001001XXX	32	248000h–24FFFFh
	SA1-81	0	1	1001010XXX	32	250000h–257FFFh
	SA1-82	0	1	1001011XXX	32	258000h–25FFFFh

Table 8. S29PLI29J Sector Architecture (Continued)

Bank	Sector	CEI#	CE2#	Sector Address (A2I-AI2)	Sector Size (Kwords)	Address Range (x16)
Bank 1B	SA1-83	0	1	1001100XXX	32	260000h–267FFFh
	SA1-84	0	1	1001101XXX	32	268000h–26FFFFh
	SA1-85	0	1	1001110XXX	32	270000h–277FFFh
	SA1-86	0	1	1001111XXX	32	278000h–27FFFFh
	SA1-87	0	1	1010000XXX	32	280000h–287FFFh
	SA1-88	0	1	1010001XXX	32	288000h–28FFFFh
	SA1-89	0	1	1010010XXX	32	290000h–297FFFh
	SA1-90	0	1	1010011XXX	32	298000h–29FFFFh
	SA1-91	0	1	1010100XXX	32	2A0000h–2A7FFFh
	SA1-92	0	1	1010101XXX	32	2A8000h–2AFFFFh
	SA1-93	0	1	1010110XXX	32	2B0000h–2B7FFFh
	SA1-94	0	1	1010111XXX	32	2B8000h–2BFFFFh
	SA1-95	0	1	1011000XXX	32	2C0000h–2C7FFFh
	SA1-96	0	1	1011001XXX	32	2C8000h–2CFFFFh
	SA1-97	0	1	1011010XXX	32	2D0000h–2D7FFFh
	SA1-98	0	1	1011011XXX	32	2D8000h–2DFFFFh
	SA1-99	0	1	1011100XXX	32	2E0000h–2E7FFFh
	SA1-100	0	1	1011101XXX	32	2E8000h–2EFFFFh
	SA1-101	0	1	1011110XXX	32	2F0000h–2F7FFFh
	SA1-102	0	1	1011111XXX	32	2F8000h–2FFFFFh
	SA1-103	0	1	1100000XXX	32	300000h–307FFFh
	SA1-104	0	1	1100001XXX	32	308000h–30FFFFh
	SA1-105	0	1	1100010XXX	32	310000h–317FFFh
	SA1-106	0	1	1100011XXX	32	318000h–31FFFFh
	SA1-107	0	1	1100100XXX	32	320000h–327FFFh
	SA1-108	0	1	1100101XXX	32	328000h–32FFFFh
	SA1-109	0	1	1100110XXX	32	330000h–337FFFh
	SA1-110	0	1	1100111XXX	32	338000h–33FFFFh
	SA1-111	0	1	1101000XXX	32	340000h–347FFFh
	SA1-112	0	1	1101001XXX	32	348000h–34FFFFh
	SA1-113	0	1	1101010XXX	32	350000h–357FFFh
	SA1-114	0	1	1101011XXX	32	358000h–35FFFFh
	SA1-115	0	1	1101100XXX	32	360000h–367FFFh
	SA1-116	0	1	1101101XXX	32	368000h–36FFFFh
	SA1-117	0	1	1101110XXX	32	370000h–377FFFh
	SA1-118	0	1	1101111XXX	32	378000h–37FFFFh
	SA1-119	0	1	1110000XXX	32	380000h–387FFFh
	SA1-120	0	1	1110001XXX	32	388000h–38FFFFh
	SA1-121	0	1	1110010XXX	32	390000h–397FFFh
	SA1-122	0	1	1110011XXX	32	398000h–39FFFFh
	SA1-123	0	1	1110100XXX	32	3A0000h–3A7FFFh
	SA1-124	0	1	1110101XXX	32	3A8000h–3AFFFFh
	SA1-125	0	1	1110110XXX	32	3B0000h–3B7FFFh
	SA1-126	0	1	1110111XXX	32	3B8000h–3BFFFFh

Table 8. S29PLI29J Sector Architecture (Continued)

Bank	Sector	CEI#	CE2#	Sector Address (A21-A12)	Sector Size (Kwords)	Address Range (x16)
Bank 1B	SA1-127	0	1	1111000XXX	32	3C0000h–3C7FFFh
	SA1-128	0	1	1111001XXX	32	3C8000h–3CFFFFh
	SA1-129	0	1	1111010XXX	32	3D0000h–3D7FFFh
	SA1-130	0	1	1111011XXX	32	3D8000h–3DFFFFh
	SA1-131	0	1	1111100XXX	32	3E0000h–3E7FFFh
	SA1-132	0	1	1111101XXX	32	3E8000h–3EFFFFh
	SA1-133	0	1	1111110XXX	32	3F0000h–3F7FFFh
	SA1-134	0	1	1111111XXX	32	3F8000h–3FFFFFh
Bank 2A	SA2-0	1	0	0000000XXX	32	000000h–007FFFh
	SA2-1	1	0	0000001XXX	32	008000h–00FFFFh
	SA2-2	1	0	0000010XXX	32	010000h–017FFFh
	SA2-3	1	0	0000011XXX	32	018000h–01FFFFh
	SA2-4	1	0	0000100XXX	32	020000h–027FFFh
	SA2-5	1	0	0000101XXX	32	028000h–02FFFFh
	SA2-6	1	0	0000110XXX	32	030000h–037FFFh
	SA2-7	1	0	0000111XXX	32	038000h–03FFFFh
	SA2-8	1	0	0001000XXX	32	040000h–047FFFh
	SA2-9	1	0	0001001XXX	32	048000h–04FFFFh
	SA2-10	1	0	0001010XXX	32	050000h–057FFFh
	SA2-11	1	0	0001011XXX	32	058000h–05FFFFh
	SA2-12	1	0	0001100XXX	32	060000h–067FFFh
	SA2-13	1	0	0001101XXX	32	068000h–06FFFFh
	SA2-14	1	0	0001110XXX	32	070000h–077FFFh
	SA2-15	1	0	0001111XXX	32	078000h–07FFFFh
	SA2-16	1	0	0010000XXX	32	080000h–087FFFh
	SA2-17	1	0	0010001XXX	32	088000h–08FFFFh
	SA2-18	1	0	0010010XXX	32	090000h–097FFFh
	SA2-19	1	0	0010011XXX	32	098000h–09FFFFh
	SA2-20	1	0	0010100XXX	32	0A0000h–0A7FFFh
	SA2-21	1	0	0010101XXX	32	0A8000h–0AFFFFh
	SA2-22	1	0	0010110XXX	32	0B0000h–0B7FFFh
	SA2-23	1	0	0010111XXX	32	0B8000h–0BFFFFh
	SA2-24	1	0	0011000XXX	32	0C0000h–0C7FFFh
	SA2-25	1	0	0011001XXX	32	0C8000h–0CFFFFh
	SA2-26	1	0	0011010XXX	32	0D0000h–0D7FFFh
	SA2-27	1	0	0011011XXX	32	0D8000h–0DFFFFh
	SA2-28	1	0	0011100XXX	32	0E0000h–0E7FFFh
	SA2-29	1	0	0011101XXX	32	0E8000h–0EFFFFh
	SA2-30	1	0	0011110XXX	32	0F0000h–0F7FFFh
	SA2-31	1	0	0011111XXX	32	0F8000h–0FFFFFh
	SA2-32	1	0	0100000XXX	32	100000h–107FFFh
	SA2-33	1	0	0100001XXX	32	108000h–10FFFFh
	SA2-34	1	0	0100010XXX	32	110000h–117FFFh
	SA2-35	1	0	0100011XXX	32	118000h–11FFFFh

Table 8. S29PLI29J Sector Architecture (Continued)

Bank	Sector	CEI#	CE2#	Sector Address (A2I-AI2)	Sector Size (Kwords)	Address Range (x16)
Bank 2A	SA2-36	1	0	0100100XXX	32	120000h–127FFFh
	SA2-37	1	0	0100101XXX	32	128000h–12FFFFh
	SA2-38	1	0	0100110XXX	32	130000h–137FFFh
	SA2-39	1	0	0100111XXX	32	138000h–13FFFFh
	SA2-40	1	0	0101000XXX	32	140000h–147FFFh
	SA2-41	1	0	0101001XXX	32	148000h–14FFFFh
	SA2-42	1	0	0101010XXX	32	150000h–157FFFh
	SA2-43	1	0	0101011XXX	32	158000h–15FFFFh
Bank 2A	SA2-44	1	0	0101100XXX	32	160000h–167FFFh
	SA2-45	1	0	0101101XXX	32	168000h–16FFFFh
	SA2-46	1	0	0101110XXX	32	170000h–177FFFh
	SA2-47	1	0	0101111XXX	32	178000h–17FFFFh
	SA2-48	1	0	0110000XXX	32	180000h–187FFFh
	SA2-49	1	0	0110001XXX	32	188000h–18FFFFh
	SA2-50	1	0	0110010XXX	32	190000h–197FFFh
	SA2-51	1	0	0110011XXX	32	198000h–19FFFFh
	SA2-52	1	0	0110100XXX	32	1A0000h–1A7FFFh
	SA2-53	1	0	0110101XXX	32	1A8000h–1AFFFFh
	SA2-54	1	0	0110110XXX	32	1B0000h–1B7FFFh
	SA2-55	1	0	0110111XXX	32	1B8000h–1BFFFFh
	SA2-56	1	0	0111000XXX	32	1C0000h–1C7FFFh
	SA2-57	1	0	0111001XXX	32	1C8000h–1CFFFFh
	SA2-58	1	0	0111010XXX	32	1D0000h–1D7FFFh
	SA2-59	1	0	0111011XXX	32	1D8000h–1DFFFFh
	SA2-60	1	0	0111100XXX	32	1E0000h–1E7FFFh
	SA2-61	1	0	0111101XXX	32	1E8000h–1EFFFFh
	SA2-62	1	0	0111110XXX	32	1F0000h–1F7FFFh
	SA2-63	1	0	0111111XXX	32	1F8000h–1FFFFFh
	SA2-64	1	0	1000000XXX	32	200000h–207FFFh
	SA2-65	1	0	1000001XXX	32	208000h–20FFFFh
	SA2-66	1	0	1000010XXX	32	210000h–217FFFh
	SA2-67	1	0	1000011XXX	32	218000h–21FFFFh
	SA2-68	1	0	1000100XXX	32	220000h–227FFFh
	SA2-69	1	0	1000101XXX	32	228000h–22FFFFh
	SA2-70	1	0	1000110XXX	32	230000h–237FFFh
	SA2-71	1	0	1000111XXX	32	238000h–23FFFFh
	SA2-72	1	0	1001000XXX	32	240000h–247FFFh
	SA2-73	1	0	1001001XXX	32	248000h–24FFFFh
	SA2-74	1	0	1001010XXX	32	250000h–257FFFh
	SA2-75	1	0	1001011XXX	32	258000h–25FFFFh
	SA2-76	1	0	1001100XXX	32	260000h–267FFFh
	SA2-77	1	0	1001101XXX	32	268000h–26FFFFh
	SA2-78	1	0	1001110XXX	32	270000h–277FFFh
	SA2-79	1	0	1001111XXX	32	278000h–27FFFFh

Table 8. S29PLI29J Sector Architecture (Continued)

Bank	Sector	CEI#	CE2#	Sector Address (A2I-AI2)	Sector Size (Kwords)	Address Range (xI6)
Bank 2A	SA2-80	1	0	1010000XXX	32	280000h–287FFFh
	SA2-81	1	0	1010001XXX	32	288000h–28FFFFh
	SA2-82	1	0	1010010XXX	32	290000h–297FFFh
	SA2-83	1	0	1010011XXX	32	298000h–29FFFFh
	SA2-84	1	0	1010100XXX	32	2A0000h–2A7FFFh
	SA2-85	1	0	1010101XXX	32	2A8000h–2AFFFFh
	SA2-86	1	0	1010110XXX	32	2B0000h–2B7FFFh
	SA2-87	1	0	1010111XXX	32	2B8000h–2BFFFFh
	SA2-88	1	0	1011000XXX	32	2C0000h–2C7FFFh
	SA2-89	1	0	1011001XXX	32	2C8000h–2CFFFFh
	SA2-90	1	0	1011010XXX	32	2D0000h–2D7FFFh
	SA2-91	1	0	1011011XXX	32	2D8000h–2DFFFFh
	SA2-92	1	0	1011100XXX	32	2E0000h–2E7FFFh
	SA2-93	1	0	1011101XXX	32	2E8000h–2EFFFFh
	SA2-94	1	0	1011110XXX	32	2F0000h–2F7FFFh
	SA2-95	1	0	1011111XXX	32	2F8000h–2FFFFFh
Bank 2B	SA2-96	1	0	1100000XXX	32	300000h–307FFFh
	SA2-97	1	0	1100001XXX	32	308000h–30FFFFh
	SA2-98	1	0	1100010XXX	32	310000h–317FFFh
	SA2-99	1	0	1100011XXX	32	318000h–31FFFFh
	SA2-100	1	0	1100100XXX	32	320000h–327FFFh
	SA2-101	1	0	1100101XXX	32	328000h–32FFFFh
	SA2-102	1	0	1100110XXX	32	330000h–337FFFh
	SA2-103	1	0	1100111XXX	32	338000h–33FFFFh
	SA2-104	1	0	1101000XXX	32	340000h–347FFFh
	SA2-105	1	0	1101001XXX	32	348000h–34FFFFh
	SA2-106	1	0	1101010XXX	32	350000h–357FFFh
	SA2-107	1	0	1101011XXX	32	358000h–35FFFFh
	SA2-108	1	0	1101100XXX	32	360000h–367FFFh
	SA2-109	1	0	1101101XXX	32	368000h–36FFFFh
	SA2-110	1	0	1101110XXX	32	370000h–377FFFh
	SA2-111	1	0	1101111XXX	32	378000h–37FFFFh
	SA2-112	1	0	1110000XXX	32	380000h–387FFFh
	SA2-113	1	0	1110001XXX	32	388000h–38FFFFh
	SA2-114	1	0	1110010XXX	32	390000h–397FFFh
	SA2-115	1	0	1110011XXX	32	398000h–39FFFFh
	SA2-116	1	0	1110100XXX	32	3A0000h–3A7FFFh
	SA2-117	1	0	1110101XXX	32	3A8000h–3AFFFFh
	SA2-118	1	0	1110110XXX	32	3B0000h–3B7FFFh
	SA2-119	1	0	1110111XXX	32	3B8000h–3BFFFFh
	SA2-120	1	0	1111000XXX	32	3C0000h–3C7FFFh
	SA2-121	1	0	1111001XXX	32	3C8000h–3CFFFFh
	SA2-122	1	0	1111010XXX	32	3D0000h–3D7FFFh
	SA2-123	1	0	1111011XXX	32	3D8000h–3DFFFFh

Table 8. S29PLI29J Sector Architecture (Continued)

Bank	Sector	CEI#	CE2#	Sector Address (A2I-AI2)	Sector Size (Kwords)	Address Range (xI6)
Bank 2B	SA2-124	1	0	1111100XXX	32	3E0000h–3E7FFFh
	SA2-125	1	0	1111101XXX	32	3E8000h–3EFFFFh
	SA2-126	1	0	1111110XXX	32	3F0000h–3F7FFFh
	SA2-127	1	0	1111111000	4	3F8000h–3F8FFFh
	SA2-128	1	0	1111111001	4	3F9000h–3F9FFFh
	SA2-129	1	0	1111111010	4	3FA000h–3FAFFFh
	SA2-130	1	0	1111111011	4	3FB000h–3FBFFFh
	SA2-131	1	0	1111111100	4	3FC000h–3FCFFFh
	SA2-132	1	0	1111111101	4	3FD000h–3FDFFFh
	SA2-133	1	0	1111111110	4	3FE000h–3FEFFFh
	SA2-134	1	0	1111111111	4	3FF000h–3FFFFFh

Table 9. SecSiTM Sector Addresses

	Sector Size	Address Range
Factory-Locked Area	64 words	000000h-00003Fh
Customer-Lockable Area	64 words	000040h-00007Fh

Autoselect Mode

The autoselect mode provides manufacturer and device identification, and sector protection verification, through identifier codes output on DQ7–DQ0. This mode is primarily intended for programming equipment to automatically match a device to be programmed with its corresponding programming algorithm. However, the autoselect codes can also be accessed in-system through the command register.

When using programming equipment, the autoselect mode requires V_{ID} on address pin A9. Address pins must be as shown in Table 10 and Table 11. In addition, when verifying sector protection, the sector address must appear on the appropriate highest order address bits (see Table 4). Table 10 and Table 11 show the remaining address bits that are don't care. When all necessary bits have been set as required, the programming equipment may then read the corresponding identifier code on DQ7–DQ0. However, the autoselect codes can also be accessed in-system through the command register, for instances when the device is erased or programmed in a system without access to high voltage on the A9 pin. The command sequence is illustrated in Table 21. *Note that if a Bank Address (BA) (on address bits PL127J: A22–A20, PL129J and PL064J: A21–A19, PL032J: A20–*A18) *is asserted during the third write cycle of the autoselect command, the host system can read autoselect data that bank and then immediately read array data from the other bank, without exiting the autoselect mode.*

To access the autoselect codes in-system, the host system can issue the autoselect command via the command register, as shown in Table 21. This method does not require V_{ID}. Refer to the "Autoselect Command Sequence" section for more information.

Table 10. Autoselect Codes (High Voltage Method)

Description		CE#	OE#	WE#	Amax to A12	A10	A9	A8	A7	A6	A5 to A4	A3	A2	A1	A0	DQ15 to DQ0
Manufacturer ID: Spansion products		L	L	H	BA	X	V_{ID}	X	L	L	X	L	L	L	L	0001h
Device ID	Read Cycle 1	L	L	H	BA	X	V_{ID}	X	L	L	L	L	L	L	H	227Eh
	Read Cycle 2	L										H	H	H	L	2220h (PL127J) 2202h (PL064J) 220Ah (PL032J)
	Read Cycle 3	L										H	H	H	H	2200h (PL127J) 2201h (PL064J) 2201h (PL032J)
Sector Protection Verification		L	L	H	SA	X	V_{ID}	X	L	L	L	L	L	H	L	0001h (protected), 0000h (unprotected)
SecSi Indicator Bit (DQ7, DQ6)		L	L	H	BA	X	V_{ID}	X	X	L	X	L	L	H	H	DQ7=1 (factory locked), DQ6=1 (factory and customer locked)

Table 11. Autoselect Codes for PL129J

Description		CE1#	CE2#	OE#	WE#	A21 to A12	A10	A9	A8	A7	A6	A5 to A4	A3	A2	A1	A0	DQ15 to DQ0
Manufacturer ID: Spansion products		L	H	L	H	X	X	V_{ID}	X	L	L	X	L	L	L	L	0001h
		H	L														
Device ID	Read Cycle 1	L	H	L	H	X	X	V_{ID}	X	L	L	L	L	L	L	H	227Eh
		H	L														
	Read Cycle 2	L	H										H	H	H	L	2221h
		H	L														
	Read Cycle 3	L	H										H	H	H	H	2200h
		H	L														
Sector Protection Verification		L	H	L	H	SA	X	V_{ID}	X	L	L	L	L	L	H	L	0001h (protected), 0000h (unprotected)
		H	L														
SecSi Indicator Bit (DQ7, DQ6)		L	H	L	H	X	X	V_{ID}	X	X	L	X	L	L	H	H	DQ7=1 (factory locked), DQ6=1 (factory and customer locked)
		H	L														

Legend: *L = Logic Low = V_{IL}, H = Logic High = V_{IH}, BA = Bank Address, SA = Sector Address, X = Don't care.*

Note: *The autoselect codes may also be accessed in-system via command sequences*

Table 12. PL127J Boot Sector/Sector Block Addresses for Protection/Unprotection

Sector	A22-AI2	Sector/ Sector Block Size
SA0	00000000000	4 Kwords
SA1	00000000001	4 Kwords
SA2	00000000010	4 Kwords
SA3	00000000011	4 Kwords
SA4	00000000100	4 Kwords
SA5	00000000101	4 Kwords
SA6	00000000110	4 Kwords
SA7	00000000111	4 Kwords
SA8	00000001XXX	32 Kwords
SA9	00000010XXX	32 Kwords
SA10	00000011XXX	32 Kwords
SA11-SA14	000001XXXXX	128 (4x32) Kwords
SA15-SA18	000010XXXXX	128 (4x32) Kwords
SA19-SA22	000011XXXXX	128 (4x32) Kwords
SA23-SA26	000100XXXXX	128 (4x32) Kwords
SA27-SA30	000101XXXXX	128 (4x32) Kwords
SA31-SA34	000110XXXXX	128 (4x32) Kwords
SA35-SA38	000111XXXXX	128 (4x32) Kwords
SA39-SA42	001000XXXXX	128 (4x32) Kwords
SA43-SA46	001001XXXXX	128 (4x32) Kwords
SA47-SA50	001010XXXXX	128 (4x32) Kwords
SA51-SA54	001011XXXXX	128 (4x32) Kwords
SA55-SA58	001100XXXXX	128 (4x32) Kwords
SA59-SA62	001101XXXXX	128 (4x32) Kwords
SA63-SA66	001110XXXXX	128 (4x32) Kwords
SA67-SA70	001111XXXXX	128 (4x32) Kwords
SA71-SA74	010000XXXXX	128 (4x32) Kwords
SA75-SA78	010001XXXXX	128 (4x32) Kwords
SA79-SA82	010010XXXXX	128 (4x32) Kwords
SA83-SA86	010011XXXXX	128 (4x32) Kwords
SA87-SA90	010100XXXXX	128 (4x32) Kwords
SA91-SA94	010101XXXXX	128 (4x32) Kwords
SA95-SA98	010110XXXXX	128 (4x32) Kwords
SA99-SA102	010111XXXXX	128 (4x32) Kwords
SA103-SA106	011000XXXXX	128 (4x32) Kwords
SA107-SA110	011001XXXXX	128 (4x32) Kwords
SA111-SA114	011010XXXXX	128 (4x32) Kwords
SA115-SA118	011011XXXXX	128 (4x32) Kwords
SA119-SA122	011100XXXXX	128 (4x32) Kwords
SA123-SA126	011101XXXXX	128 (4x32) Kwords
SA127-SA130	011110XXXXX	128 (4x32) Kwords

Sector	A22-AI2	Sector/ Sector Block Size
SA131-SA134	011111XXXXX	128 (4x32) Kwords
SA135-SA138	100000XXXXX	128 (4x32) Kwords
SA139-SA142	100001XXXXX	128 (4x32) Kwords
SA143-SA146	100010XXXXX	128 (4x32) Kwords
SA147-SA150	100011XXXXX	128 (4x32) Kwords
SA151-SA154	100100XXXXX	128 (4x32) Kwords
SA155-SA158	100101XXXXX	128 (4x32) Kwords
SA159-SA162	100110XXXXX	128 (4x32) Kwords
SA163-SA166	100111XXXXX	128 (4x32) Kwords
SA167-SA170	101000XXXXX	128 (4x32) Kwords
SA171-SA174	101001XXXXX	128 (4x32) Kwords
SA175-SA178	101010XXXXX	128 (4x32) Kwords
SA179-SA182	101011XXXXX	128 (4x32) Kwords
SA183-SA186	101100XXXXX	128 (4x32) Kwords
SA187-SA190	101101XXXXX	128 (4x32) Kwords
SA191-SA194	101110XXXXX	128 (4x32) Kwords
SA195-SA198	101111XXXXX	128 (4x32) Kwords
SA199-SA202	110000XXXXX	128 (4x32) Kwords
SA203-SA206	110001XXXXX	128 (4x32) Kwords
SA207-SA210	110010XXXXX	128 (4x32) Kwords
SA211-SA214	110011XXXXX	128 (4x32) Kwords
SA215-SA218	110100XXXXX	128 (4x32) Kwords
SA219-SA222	110101XXXXX	128 (4x32) Kwords
SA223-SA226	110110XXXXX	128 (4x32) Kwords
SA227-SA230	110111XXXXX	128 (4x32) Kwords
SA231-SA234	111000XXXXX	128 (4x32) Kwords
SA235-SA238	111001XXXXX	128 (4x32) Kwords
SA239-SA242	111010XXXXX	128 (4x32) Kwords
SA243-SA246	111011XXXXX	128 (4x32) Kwords
SA247-SA250	111100XXXXX	128 (4x32) Kwords
SA251-SA254	111101XXXXX	128 (4x32) Kwords
SA255-SA258	111110XXXXX	128 (4x32) Kwords
SA259	11111100XXX	32 Kwords
SA260	11111101XXX	32 Kwords
SA261	11111110XXX	32 Kwords
SA262	11111111000	4 Kwords
SA263	11111111001	4 Kwords
SA264	11111111010	4 Kwords
SA265	11111111011	4 Kwords

Table 13. PLI29J Boot Sector/Sector Block Addresses for Protection/Unprotection

CE1# Control			CE2# Control		
Sector Group	A21-12	Sector/Sector Block Size	Sector Group	A21-12	Sector/Sector Block Size
SA1-0	0000000000	4 Kwords	SA2-0–SA2-3	00000XXXXX	128 (4x32) Kwords
SA1-1	0000000001	4 Kwords	SA2-4–SA2-7	00001XXXXX	128 (4x32) Kwords
SA1-2	0000000010	4 Kwords	SA2-8–SA2-11	00010XXXXX	128 (4x32) Kwords
SA1-3	0000000011	4 Kwords	SA2-12–SA2-15	00011XXXXX	128 (4x32) Kwords
SA1-4	0000000100	4 Kwords	SA2-16–SA2-19	00100XXXXX	128 (4x32) Kwords
SA1-5	0000000101	4 Kwords	SA2-20–SA2-23	00101XXXXX	128 (4x32) Kwords
SA1-6	0000000110	4 Kwords	SA2-24–SA2-27	00110XXXXX	128 (4x32) Kwords
SA1-7	0000000111	4 Kwords	SA2-28–SA2-31	00111XXXXX	128 (4x32) Kwords
SA1-8	0000001XXX	32 Kwords	SA2-32–SA2-35	01000XXXXX	128 (4x32) Kwords
SA1-9	0000010XXX	32 Kwords	SA2-36–SA2-39	01001XXXXX	128 (4x32) Kwords
SA1-10	0000011XXX	32 Kwords	SA2-40–SA2-43	01010XXXXX	128 (4x32) Kwords
SA1-11 - SA1-14	00001XXXXX	128 (4x32) Kwords	SA2-44–SA2-47	01011XXXXX	128 (4x32) Kwords
SA1-15 - SA1-18	00010XXXXX	128 (4x32) Kwords	SA2-48–SA2-51	01100XXXXX	128 (4x32) Kwords
SA1-19 - SA1-22	00011XXXXX	128 (4x32) Kwords	SA2-52–SA2-55	01101XXXXX	128 (4x32) Kwords
SA1-23 - SA1-26	00100XXXXX	128 (4x32) Kwords	SA2-56–SA2-59	01110XXXXX	128 (4x32) Kwords
SA1-27 - SA1-30	00101XXXXX	128 (4x32) Kwords	SA2-60–SA2-63	01111XXXXX	128 (4x32) Kwords
SA1-31 - SA1-34	00110XXXXX	128 (4x32) Kwords	SA2-64–SA2-67	10000XXXXX	128 (4x32) Kwords
SA1-35 - SA1-38	00111XXXXX	128 (4x32) Kwords	SA2-68–SA2-71	10001XXXXX	128 (4x32) Kwords
SA1-39 - SA1-42	01000XXXXX	128 (4x32) Kwords	SA2-72–SA2-75	10010XXXXX	128 (4x32) Kwords
SA1-43 - SA1-46	01001XXXXX	128 (4x32) Kwords	SA2-76–SA2-79	10011XXXXX	128 (4x32) Kwords
SA1-47 - SA1-50	01010XXXXX	128 (4x32) Kwords	SA2-80–SA2-83	10100XXXXX	128 (4x32) Kwords
SA1-51 - SA1-54	01011XXXXX	128 (4x32) Kwords	SA2-84–SA2-87	10101XXXXX	128 (4x32) Kwords
SA1-55 - SA1-58	01100XXXXX	128 (4x32) Kwords	SA2-88–SA2-91	10110XXXXX	128 (4x32) Kwords
SA1-59 - SA1-62	01101XXXXX	128 (4x32) Kwords	SA2-92–SA2-95	10111XXXXX	128 (4x32) Kwords
SA1-63 - SA1-66	01110XXXXX	128 (4x32) Kwords	SA2-96–SA2-99	11000XXXXX	128 (4x32) Kwords
SA1-67 - SA1-70	01111XXXXX	128 (4x32) Kwords	SA2-100–SA2-103	11001XXXXX	128 (4x32) Kwords
SA1-71 - SA1-74	10000XXXXX	128 (4x32) Kwords	SA2-104–SA2-107	11010XXXXX	128 (4x32) Kwords
SA1-75 - SA1-78	10001XXXXX	128 (4x32) Kwords	SA2-108–SA2-111	11011XXXXX	128 (4x32) Kwords
SA1-79 - SA1-82	10010XXXXX	128 (4x32) Kwords	SA2-112–SA2-115	11100XXXXX	128 (4x32) Kwords
SA1-83 - SA1-86	10011XXXXX	128 (4x32) Kwords	SA2-116–SA2-119	11101XXXXX	128 (4x32) Kwords
SA1-87 - SA1-90	10100XXXXX	128 (4x32) Kwords	SA2-120–SA2-123	11110XXXXX	128 (4x32) Kwords
SA1-91 - SA1-94	10101XXXXX	128 (4x32) Kwords	SA2-124	1111100XXX	32 Kwords
SA1-95 - SA1-98	10110XXXXX	128 (4x32) Kwords	SA2-125	1111101XXX	32 Kwords
SA1-99 - SA1-102	10111XXXXX	128 (4x32) Kwords	SA2-126	1111110XXX	32 Kwords
SA1-103 - SA1-106	11000XXXXX	128 (4x32) Kwords	SA2-127	1111111000	4 Kwords
SA1-107 - SA1-110	11001XXXXX	128 (4x32) Kwords	SA2-128	1111111001	4 Kwords
SA1-111 - SA1-114	11010XXXXX	128 (4x32) Kwords	SA2-129	1111111010	4 Kwords
SA1-115 - SA1-118	11011XXXXX	128 (4x32) Kwords	SA2-130	1111111011	4 Kwords
SA1-119 - SA1-122	11100XXXXX	128 (4x32) Kwords	SA2-131	1111111100	4 Kwords
SA1-123 - SA1-126	11101XXXXX	128 (4x32) Kwords	SA2-132	1111111101	4 Kwords
SA1-127 - SA1-130	11110XXXXX	128 (4x32) Kwords	SA2-133	1111111110	4 Kwords
SA1-131 - SA1-134	11111XXXXX	128 (4x32) Kwords	SA2-134	1111111111	4 Kwords

Table 14. PL064J Boot Sector/Sector Block Addresses for Protection/Unprotection

Sector	A21-A12	Sector/Sector Block Size
SA0	0000000000	4 Kwords
SA1	0000000001	4 Kwords
SA2	0000000010	4 Kwords
SA3	0000000011	4 Kwords
SA4	0000000100	4 Kwords
SA5	0000000101	4 Kwords
SA6	0000000110	4 Kwords
SA7	0000000111	4 Kwords
SA8	0000001XXX	32 Kwords
SA9	0000010XXX	32 Kwords
SA10	0000011XXX	32 Kwords
SA11-SA14	00001XXXXX	128 (4x32) Kwords
SA15-SA18	00010XXXXX	128 (4x32) Kwords
SA19-SA22	00011XXXXX	128 (4x32) Kwords
SA23-SA26	00100XXXXX	128 (4x32) Kwords
SA27-SA30	00101XXXXX	128 (4x32) Kwords
SA31-SA34	00110XXXXX	128 (4x32) Kwords
SA35-SA38	00111XXXXX	128 (4x32) Kwords
SA39-SA42	01000XXXXX	128 (4x32) Kwords
SA43-SA46	01001XXXXX	128 (4x32) Kwords
SA47-SA50	01010XXXXX	128 (4x32) Kwords
SA51-SA54	01011XXXXX	128 (4x32) Kwords
SA55-SA58	01100XXXXX	128 (4x32) Kwords
SA59-SA62	01101XXXXX	128 (4x32) Kwords
SA63-SA66	01110XXXXX	128 (4x32) Kwords
SA67-SA70	01111XXXXX	128 (4x32) Kwords
SA71-SA74	10000XXXXX	128 (4x32) Kwords
SA75-SA78	10001XXXXX	128 (4x32) Kwords
SA79-SA82	10010XXXXX	128 (4x32) Kwords
SA83-SA86	10011XXXXX	128 (4x32) Kwords
SA87-SA90	10100XXXXX	128 (4x32) Kwords
SA91-SA94	10101XXXXX	128 (4x32) Kwords
SA95-SA98	10110XXXXX	128 (4x32) Kwords
SA99-SA102	10111XXXXX	128 (4x32) Kwords
SA103-SA106	11000XXXXX	128 (4x32) Kwords
SA107-SA110	11001XXXXX	128 (4x32) Kwords
SA111-SA114	11010XXXXX	128 (4x32) Kwords
SA115-SA118	11011XXXXX	128 (4x32) Kwords
SA119-SA122	11100XXXXX	128 (4x32) Kwords
SA123-SA126	11101XXXXX	128 (4x32) Kwords
SA127-SA130	11110XXXXX	128 (4x32) Kwords
SA131	1111100XXX	32 Kwords
SA132	1111101XXX	32 Kwords
SA133	1111110XXX	32 Kwords
SA134	1111111000	4 Kwords
SA135	1111111001	4 Kwords
SA136	1111111010	4 Kwords
SA137	1111111011	4 Kwords
SA138	1111111100	4 Kwords
SA139	1111111101	4 Kwords
SA140	1111111110	4 Kwords
SA141	1111111111	4 Kwords

Table 15. PL032J Boot Sector/Sector Block Addresses for Protection/Unprotection

Sector	A21-A12	Sector/Sector Block Size
SA0	000000000	4 Kwords
SA1	000000001	4 Kwords
SA2	000000010	4 Kwords
SA3	000000011	4 Kwords
SA4	000000100	4 Kwords
SA5	000000101	4 Kwords
SA6	000000110	4 Kwords
SA7	000000111	4 Kwords
SA8	000001XXX	32 Kwords
SA9	000010XXX	32 Kwords
SA10	000011XXX	32 Kwords
SA11-SA14	0001XXXXX	128 (4x32) Kwords
SA15-SA18	0010XXXXX	128 (4x32) Kwords
SA19-SA22	0011XXXXX	128 (4x32) Kwords
SA23-SA26	0100XXXXX	128 (4x32) Kwords
SA27-SA30	0101XXXXX	128 (4x32) Kwords
SA31-SA34	0110XXXXX	128 (4x32) Kwords
SA35-SA38	0111XXXXX	128 (4x32) Kwords
SA39-SA42	1000XXXXX	128 (4x32) Kwords
SA43-SA46	1001XXXXX	128 (4x32) Kwords
SA47-SA50	1010XXXXX	128 (4x32) Kwords
SA51-SA54	1011XXXXX	128 (4x32) Kwords
SA55-SA58	1100XXXXX	128 (4x32) Kwords
SA59-SA62	1101XXXXX	128 (4x32) Kwords
SA63-SA66	1110XXXXX	128 (4x32) Kwords
SA67	111100XXX	32 Kwords
SA68	111101XXX	32 Kwords
SA69	111110XXX	32 Kwords
SA70	111111000	4 Kwords
SA71	111111001	4 Kwords
SA72	111111010	4 Kwords
SA73	111111011	4 Kwords
SA74	111111100	4 Kwords
SA75	111111101	4 Kwords
SA76	111111110	4 Kwords
SA77	111111111	4 Kwords

Selecting a Sector Protection Mode

The device is shipped with all sectors unprotected. Optional Spansion programming services enable programming and protecting sectors at the factory prior to shipping the device. Contact your local sales office for details.

It is possible to determine whether a sector is protected or unprotected. See the "SecSiTM Sector Addresses" section for details.

Table 16. Sector Protection Schemes

DYB	PPB	PPB Lock	Sector State
0	0	0	Unprotected—PPB and DYB are changeable
0	0	1	Unprotected—PPB not changeable, DYB is changeable
0	1	0	Protected—PPB and DYB are changeable
1	0	0	
1	1	0	
0	1	1	Protected—PPB not changeable, DYB is changeable
1	0	1	
1	1	1	

Sector Protection

The PL127J, PL129J, PL064J, and PL032J features several levels of sector protection, which can disable both the program and erase operations in certain sectors or sector groups:

Persistent Sector Protection

A command sector protection method that replaces the old 12 V controlled protection method.

Password Sector Protection

A highly sophisticated protection method that requires a password before changes to certain sectors or sector groups are permitted

WP# Hardware Protection

A write protect pin that can prevent program or erase operations in sectors SA1-133, SA1-134, SA2-0 and SA2-1.

The WP# Hardware Protection feature is always available, independent of the software managed protection method chosen.

Selecting a Sector Protection Mode

All parts default to operate in the Persistent Sector Protection mode. The customer must then choose if the Persistent or Password Protection method is most desirable. There are two one-time programmable non-volatile bits that define which sector protection method will be used. If the Persistent Sector Protection method is desired, programming the Persistent Sector Protection Mode Locking Bit permanently sets the device to the Persistent Sector Protection mode. If the Password Sector Protection method is desired, programming the Password Mode Locking Bit permanently sets the device to the Password Sector Protection mode. It is not possible to switch between the two protection modes once a locking bit has been set. One of the two modes must be selected when the device is first programmed. This prevents a program or virus from later setting the Password Mode Locking Bit, which would cause an unexpected shift from the default Persistent Sector Protection Mode into the Password Protection Mode.

The device is shipped with all sectors unprotected. Optional Spansion programming services enable programming and protecting sectors at the factory prior to shipping the device. Contact your local sales office for details.

It is possible to determine whether a sector is protected or unprotected. See Autoselect Mode for details.

Persistent Sector Protection

The Persistent Sector Protection method replaces the 12 V controlled protection method in previous flash devices. This new method provides three different sector protection states:

- Persistently Locked—The sector is protected and cannot be changed.
- Dynamically Locked—The sector is protected and can be changed by a simple command.
- Unlocked—The sector is unprotected and can be changed by a simple command.

To achieve these states, three types of "bits" are used:

- Persistent Protection Bit
- Persistent Protection Bit Lock
- Persistent Sector Protection Mode Locking Bit

Persistent Protection Bit (PPB)

A single Persistent (non-volatile) Protection Bit is assigned to a maximum four sectors (see the sector address tables for specific sector protection groupings). All 4 Kword boot-block sectors have individual sector Persistent Protection Bits (PPBs) for greater flexibility. Each PPB is individually modifiable through the PPB Write Command.

The device erases all PPBs in parallel. If any PPB requires erasure, the device must be instructed to preprogram all of the sector PPBs prior to PPB erasure. Otherwise, a previously erased sector PPBs can potentially be over-erased. The flash device does not have a built-in means of preventing sector PPBs over-erasure.

Persistent Protection Bit Lock (PPB Lock)

The Persistent Protection Bit Lock (PPB Lock) is a global volatile bit. When set to "1", the PPBs cannot be changed. When cleared ("0"), the PPBs are changeable. There is only one PPB Lock bit per device. The PPB Lock is cleared after power-up or hardware reset. There is no command sequence to unlock the PPB Lock.

Dynamic Protection Bit (DYB)

A volatile protection bit is assigned for each sector. After power-up or hardware reset, the contents of all DYBs is "0". Each DYB is individually modifiable through the DYB Write Command.

When the parts are first shipped, the PPBs are cleared, the DYBs are cleared, and PPB Lock is defaulted to power up in the cleared state – meaning the PPBs are changeable.

When the device is first powered on the DYBs power up cleared (sectors not protected). The Protection State for each sector is determined by the logical OR of the PPB and the DYB related to that sector. For the sectors that have the PPBs cleared, the DYBs control whether or not the sector is protected or unprotected. By issuing the DYB Write command sequences, the DYBs will be set or cleared, thus placing each sector in the protected or unprotected state. These are the

so-called Dynamic Locked or Unlocked states. They are called dynamic states because it is very easy to switch back and forth between the protected and unprotected conditions. This allows software to easily protect sectors against inadvertent changes yet does not prevent the easy removal of protection when changes are needed. The DYBs maybe set or cleared as often as needed.

The PPBs allow for a more static, and difficult to change, level of protection. The PPBs retain their state across power cycles because they are non-volatile. Individual PPBs are set with a command but must all be cleared as a group through a complex sequence of program and erasing commands. The PPBs are also limited to 100 erase cycles.

The PPB Lock bit adds an additional level of protection. Once all PPBs are programmed to the desired settings, the PPB Lock may be set to "1". Setting the PPB Lock disables all program and erase commands to the non-volatile PPBs. In effect, the PPB Lock Bit locks the PPBs into their current state. The only way to clear the PPB Lock is to go through a power cycle. System boot code can determine if any changes to the PPB are needed; for example, to allow new system code to be downloaded. If no changes are needed then the boot code can set the PPB Lock to disable any further changes to the PPBs during system operation.

The WP#/ACC write protect pin adds a final level of hardware protection to sectors SA1-133, SA1-134, SA2-0 and SA2-1. When this pin is low it is not possible to change the contents of these sectors. These sectors generally hold system boot code. The WP#/ACC pin can prevent any changes to the boot code that could override the choices made while setting up sector protection during system initialization.

For customers who are concerned about malicious viruses there is another level of security - the persistently locked state. To persistently protect a given sector or sector group, the PPBs associated with that sector need to be set to "1". Once all PPBs are programmed to the desired settings, the PPB Lock should be set to "1". Setting the PPB Lock automatically disables all program and erase commands to the Non-Volatile PPBs. In effect, the PPB Lock "freezes" the PPBs into their current state. The only way to clear the PPB Lock is to go through a power cycle.

It is possible to have sectors that have been persistently locked, and sectors that are left in the dynamic state. The sectors in the dynamic state are all unprotected. If there is a need to protect some of them, a simple DYB Write command sequence is all that is necessary. The DYB write command for the dynamic sectors switch the DYBs to signify protected and unprotected, respectively. If there is a need to change the status of the persistently locked sectors, a few more steps are required. First, the PPB Lock bit must be disabled by either putting the device through a power-cycle, or hardware reset. The PPBs can then be changed to reflect the desired settings. Setting the PPB lock bit once again will lock the PPBs, and the device operates normally again.

The best protection is achieved by executing the PPB lock bit set command early in the boot code, and protect the boot code by holding WP#/ACC = VIL.

Table 17 contains all possible combinations of the DYB, PPB, and PPB lock relating to the status of the sector.

In summary, if the PPB is set, and the PPB lock is set, the sector is protected and the protection can not be removed until the next power cycle clears the PPB lock. If the PPB is cleared, the sector can be dynamically locked or unlocked. The DYB then controls whether or not the sector is protected or unprotected.

If the user attempts to program or erase a protected sector, the device ignores the command and returns to read mode. A program command to a protected sector enables status polling for approximately 1 µs before the device returns to read mode without having modified the contents of the protected sector. An erase command to a protected sector enables status polling for approximately 50 µs after which the device returns to read mode without having erased the protected sector.

The programming of the DYB, PPB, and PPB lock for a given sector can be verified by writing a DYB/PPB/PPB lock verify command to the device. There is an alternative means of reading the protection status. Take RESET# to VIL and hold WE# at VIH.(The high voltage A9 Autoselect Mode also works for reading the status of the PPBs). Scanning the addresses (A18–A11) while (A6, A1, A0) = (0, 1, 0) will produce a logical '1" code at device output DQ0 for a protected sector or a "0" for an unprotected sector. In this mode, the other addresses are don't cares. Address location with A1 = VIL are reserved for autoselect manufacturer and device codes.

Persistent Sector Protection Mode Locking Bit

Like the password mode locking bit, a Persistent Sector Protection mode locking bit exists to guarantee that the device remain in software sector protection. Once set, the Persistent Sector Protection locking bit prevents programming of the password protection mode locking bit. This guarantees that a hacker could not place the device in password protection mode.

Password Protection Mode

The Password Sector Protection Mode method allows an even higher level of security than the Persistent Sector Protection Mode. There are two main differences between the Persistent Sector Protection and the Password Sector Protection Mode:

When the device is first powered on, or comes out of a reset cycle, the PPB Lock bit set to the locked state, rather than cleared to the unlocked state.

The only means to clear the PPB Lock bit is by writing a unique 64-bit Password to the device.

The Password Sector Protection method is otherwise identical to the Persistent Sector Protection method.

A 64-bit password is the only additional tool utilized in this method.

Once the Password Mode Locking Bit is set, the password is permanently set with no means to read, program, or erase it. The password is used to clear the PPB Lock bit. The Password Unlock command must be written to the flash, along with a password. The flash device internally compares the given password with the pre-programmed password. If they match, the PPB Lock bit is cleared, and the PPBs can be altered. If they do not match, the flash device does nothing. There is a built-in 2 µs delay for each "password check." This delay is intended to thwart any efforts to run a program that tries all possible combinations in order to crack the password.

Password and Password Mode Locking Bit

In order to select the Password sector protection scheme, the customer must first program the password. The password may be correlated to the unique Electronic Serial Number (ESN) of the particular flash device. Each ESN is different for every

flash device; therefore each password should be different for every flash device. While programming in the password region, the customer may perform Password Verify operations.

Once the desired password is programmed in, the customer must then set the Password Mode Locking Bit. This operation achieves two objectives:

Permanently sets the device to operate using the Password Protection Mode. It is not possible to reverse this function.

Disables all further commands to the password region. All program, and read operations are ignored.

Both of these objectives are important, and if not carefully considered, may lead to unrecoverable errors. The user must be sure that the Password Protection method is desired when setting the Password Mode Locking Bit. More importantly, the user must be sure that the password is correct when the Password Mode Locking Bit is set. Due to the fact that read operations are disabled, there is no means to verify what the password is afterwards. If the password is lost after setting the Password Mode Locking Bit, there will be no way to clear the PPB Lock bit.

The Password Mode Locking Bit, once set, prevents reading the 64-bit password on the DQ bus and further password programming. The Password Mode Locking Bit is not erasable. Once Password Mode Locking Bit is programmed, the Persistent Sector Protection Locking Bit is disabled from programming, guaranteeing that no changes to the protection scheme are allowed.

64-bit Password

The 64-bit Password is located in its own memory space and is accessible through the use of the Password Program and Verify commands (see "Password Verify Command"). The password function works in conjunction with the Password Mode Locking Bit, which when set, prevents the Password Verify command from reading the contents of the password on the pins of the device.

Write Protect (WP#)

The Write Protect feature provides a hardware method of protecting the upper two and lower two sectors without using V_{ID}. This function is provided by the WP# pin and overrides the previously discussed "High Voltage Sector Protection" section method.

If the system asserts V_{IL} on the WP#/ACC pin, the device disables program and erase functions in the two outermost 4 Kword sectors on both ends of the flash array independent of whether it was previously protected or unprotected.

If the system asserts V_{IH} on the WP#/ACC pin, the device reverts the upper two and lower two sectors to whether they were last set to be protected or unprotected. That is, sector protection or unprotection for these sectors depends on whether they were last protected or unprotected using the method described in the "High Voltage Sector Protection" section.

Note that the WP#/ACC pin must not be left floating or unconnected; inconsistent behavior of the device may result.

Persistent Protection Bit Lock

The Persistent Protection Bit (PPB) Lock is a volatile bit that reflects the state of the Password Mode Locking Bit after power-up reset. If the Password Mode Lock Bit is also set after a hardware reset (RESET# asserted) or a power-up reset, the ONLY means for clearing the PPB Lock Bit in Password Protection Mode is to issue

the Password Unlock command. Successful execution of the Password Unlock command clears the PPB Lock Bit, allowing for sector PPBs modifications. Asserting RESET#, taking the device through a power-on reset, or issuing the PPB Lock Bit Set command sets the PPB Lock Bit to a "1" when the Password Mode Lock Bit is not set.

If the Password Mode Locking Bit is not set, including Persistent Protection Mode, the PPB Lock Bit is cleared after power-up or hardware reset. The PPB Lock Bit is set by issuing the PPB Lock Bit Set command. Once set the only means for clearing the PPB Lock Bit is by issuing a hardware or power-up reset. The Password Unlock command is ignored in Persistent Protection Mode.

High Voltage Sector Protection

Sector protection and unprotection may also be implemented using programming equipment. The procedure requires high voltage (V_{ID}) to be placed on the RESET# pin. Refer to Figure 1 for details on this procedure. Note that for sector unprotect, all unprotected sectors must first be protected prior to the first sector write cycle.

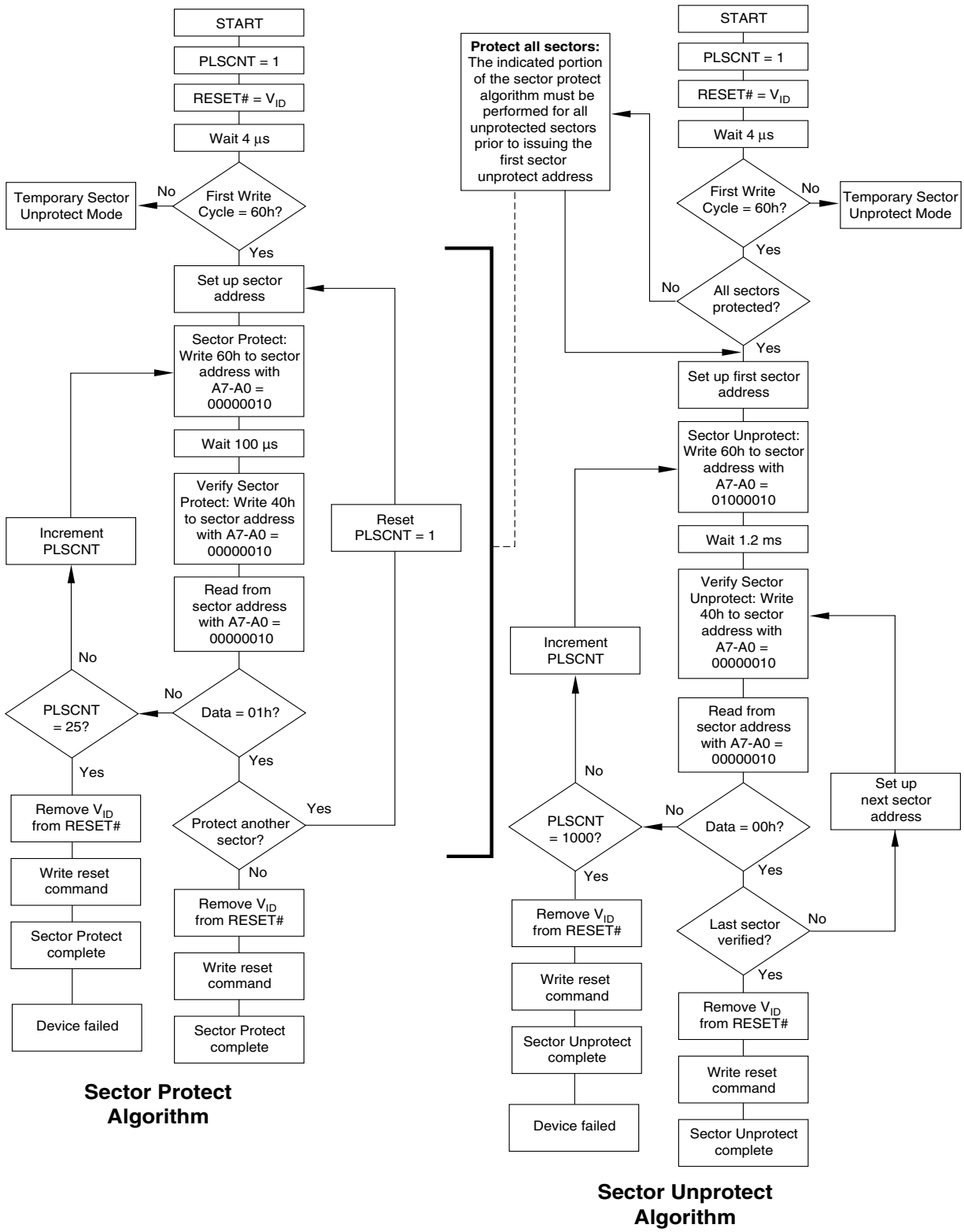

Figure I. In-System Sector Protection/Sector Unprotection Algorithms

Temporary Sector Unprotect

This feature allows temporary unprotection of previously protected sectors to change data in-system. The Sector Unprotect mode is activated by setting the RESET# pin to V_{ID}. During this mode, formerly protected sectors can be programmed or erased by selecting the sector addresses. Once V_{ID} is removed from the RESET# pin, all the previously protected sectors are protected again. 2 shows the algorithm, and 21 shows the timing diagrams, for this feature. While PPB lock is set, the device cannot enter the Temporary Sector Unprotection Mode.

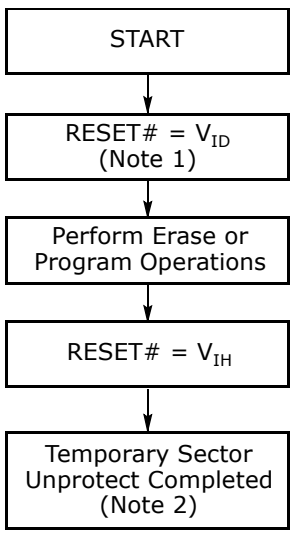

Notes:

1. *All protected sectors unprotected (If WP#/ACC = V_{IL}, upper two and lower two sectors will remain protected).*
2. *All previously protected sectors are protected once again*

Figure 2. Temporary Sector Unprotect Operation

SecSi™ (Secured Silicon) Sector Flash Memory Region

The SecSi (Secured Silicon) Sector feature provides a Flash memory region that enables permanent part identification through an Electronic Serial Number (ESN) The 128-word SecSi sector is divided into 64 factory-lockable words that can be programmed and locked by the customer. The SecSi sector is located at addresses 000000h-00007Fh in both Persistent Protection mode and Password Protection mode. Indicator bits DQ6 and DQ7 are used to indicate the factory-locked and customer locked status of the part.

The system accesses the SecSi Sector through a command sequence (see the "Enter SecSi™ Sector/Exit SecSi Sector Command Sequence" section). After the system has written the Enter SecSi Sector command sequence, it may read the SecSi Sector by using the addresses normally occupied by the boot sectors. This mode of operation continues until the system issues the Exit SecSi Sector command sequence, or until power is removed from the device. On power-up, or following a hardware reset, the device reverts to sending commands to the normal address space. *Note that the ACC function and unlock bypass modes are not available when the SecSi Sector is enabled.*

Factory-Locked Area (64 words)

The factory-locked area of the SecSi Sector (000000h-00003Fh) is locked when the part is shipped, whether or not the area was programmed at the factory. The

SecSi Sector Factory-locked Indicator Bit (DQ7) is permanently set to a "1". Optional Spansion programming services can program the factory-locked area with a random ESN, a customer-defined code, or any combination of the two. Because only FASL can program and protect the factory-locked area, this method ensures the security of the ESN once the product is shipped to the field. Contact your local sales office for details on using Spansion's programming services. Note that the ACC function and unlock bypass modes are not available when the SecSi sector is enabled.

Customer-Lockable Area (64 words)

The customer-lockable area of the SecSi Sector (000040h-00007Fh) is shipped unprotected, which allows the customer to program and optionally lock the area as appropriate for the application. The SecSi Sector Customer-locked Indicator Bit (DQ6) is shipped as "0" and can be permanently locked to "1" by issuing the SecSi Protection Bit Program Command. The SecSi Sector can be read any number of times, but can be programmed and locked only once. Note that the accelerated programming (ACC) and unlock bypass functions are not available when programming the SecSi Sector.

The Customer-lockable SecSi Sector area can be protected using one of the following procedures:

- Write the three-cycle Enter SecSi Sector Region command sequence, and then follow the in-system sector protect algorithm as shown in Figure 1, except that *RESET# may be at either* V_{IH} *or* V_{ID}. This allows in-system protection of the SecSi Sector Region without raising any device pin to a high voltage. Note that this method is only applicable to the SecSi Sector.
- To verify the protect/unprotect status of the SecSi Sector, follow the algorithm shown in Figure 3.

Once the SecSi Sector is locked and verified, the system must write the Exit SecSi Sector Region command sequence to return to reading and writing the remainder of the array.

The SecSi Sector lock must be used with caution since, once locked, there is no procedure available for unlocking the SecSi Sector area and none of the bits in the SecSi Sector memory space can be modified in any way.

SecSi Sector Protection Bits

The SecSi Sector Protection Bits prevent programming of the SecSi Sector memory area. Once set, the SecSi Sector memory area contents are non-modifiable.

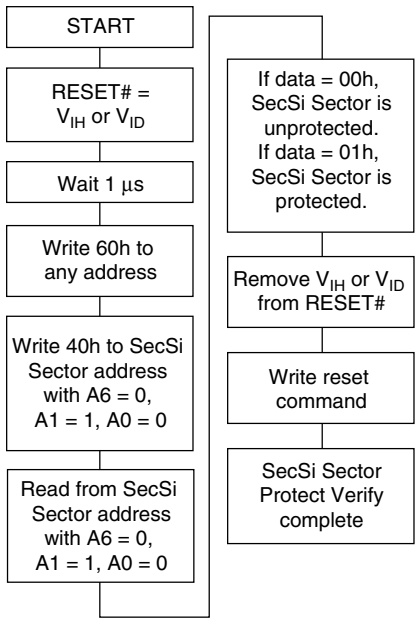

Figure 3. SecSi Sector Protect Verify

Hardware Data Protection

The command sequence requirement of unlock cycles for programming or erasing provides data protection against inadvertent writes. In addition, the following hardware data protection measures prevent accidental erasure or programming, which might otherwise be caused by spurious system level signals during V_{CC} power-up and power-down transitions, or from system noise.

Low V_{CC} Write Inhibit

When V_{CC} is less than V_{LKO}, the device does not accept any write cycles. This protects data during V_{CC} power-up and power-down. The command register and all internal program/erase circuits are disabled, and the device resets to the read mode. Subsequent writes are ignored until V_{CC} is greater than V_{LKO}. The system must provide the proper signals to the control pins to prevent unintentional writes when V_{CC} is greater than V_{LKO}.

Write Pulse "Glitch" Protection

Noise pulses of less than 3 ns (typical) on OE#, CE#, (CE1#, CE2# in PL129J) or WE# do not initiate a write cycle.

Logical Inhibit

Write cycles are inhibited by holding any one of OE# = V_{IL}, CE# (CE1# = CE2# in PL129J)= V_{IH} or WE# = V_{IH}. To initiate a write cycle, CE# (CE1# / CE2# in PL129J) and WE# must be a logical zero while OE# is a logical one.

Power-Up Write Inhibit

If WE# = CE# (CE1#, CE2# in PL129J) = V_{IL} and OE# = V_{IH} during power up, the device does not accept commands on the rising edge of WE#. The internal state machine is automatically reset to the read mode on power-up.

Common Flash Memory Interface (CFI)

The Common Flash Interface (CFI) specification outlines device and host system software interrogation handshake, which allows specific vendor-specified software algorithms to be used for entire families of devices. Software support can then be device-independent, JEDEC ID-independent, and forward- and backward-compatible for the specified flash device families. Flash vendors can standardize their existing interfaces for long-term compatibility.

This device enters the CFI Query mode when the system writes the CFI Query command, 98h, to address 55h, any time the device is ready to read array data. The system can read CFI information at the addresses given in Tables 17–20. To terminate reading CFI data, the system must write the reset command. The CFI Query mode is not accessible when the device is executing an Embedded Program or embedded Erase algorithm.

The system can also write the CFI query command when the device is in the autoselect mode. The device enters the CFI query mode, and the system can read CFI data at the addresses given in Tables 17–20. The system must write the reset command to return the device to reading array data.

For further information, please refer to the CFI Specification and CFI Publication 100. Contact your local sales office for copies of these documents.

Table 17. CFI Query Identification String

Addresses	Data	Description
10h 11h 12h	0051h 0052h 0059h	Query Unique ASCII string “QRY”
13h 14h	0002h 0000h	Primary OEM Command Set
15h 16h	0040h 0000h	Address for Primary Extended Table
17h 18h	0000h 0000h	Alternate OEM Command Set (00h = none exists)
19h 1Ah	0000h 0000h	Address for Alternate OEM Extended Table (00h = none exists)

Table 18. System Interface String

Addresses	Data	Description
1Bh	0027h	V_{CC} Min. (write/erase) D7–D4: volt, D3–D0: 100 millivolt
1Ch	0036h	V_{CC} Max. (write/erase) D7–D4: volt, D3–D0: 100 millivolt
1Dh	0000h	V_{PP} Min. voltage (00h = no V_{PP} pin present)
1Eh	0000h	V_{PP} Max. voltage (00h = no V_{PP} pin present)
1Fh	0003h	Typical timeout per single byte/word write 2^N µs
20h	0000h	Typical timeout for Min. size buffer write 2^N µs (00h = not supported)
21h	0009h	Typical timeout per individual block erase 2^N ms
22h	0000h	Typical timeout for full chip erase 2^N ms (00h = not supported)
23h	0004h	Max. timeout for byte/word write 2^N times typical
24h	0000h	Max. timeout for buffer write 2^N times typical
25h	0004h	Max. timeout per individual block erase 2^N times typical
26h	0000h	Max. timeout for full chip erase 2^N times typical (00h = not supported)

Table 19. Device Geometry Definition

Addresses	Data	Description
27h	0018h (PL127J) 0018h (PL129J) 0017h (PL064J) 0016h (PL032J)	Device Size = 2^N byte
28h 29h	0001h 0000h	Flash Device Interface description (refer to CFI publication 100)
2Ah 2Bh	0000h 0000h	Max. number of byte in multi-byte write = 2^N (00h = not supported)
2Ch	0003h	Number of Erase Block Regions within device
2Dh 2Eh 2Fh 30h	0007h 0000h 0020h 0000h	Erase Block Region 1 Information (refer to the CFI specification or CFI publication 100)
31h	00FDh (PL127J) 00FDh (PL129J) 007Dh (PL064J) 003Dh (PL032J)	Erase Block Region 2 Information (refer to the CFI specification or CFI publication 100)
32h 33h 34h	0000h 0000h 0001h	
35h 36h 37h 38h	0007h 0000h 0020h 0000h	Erase Block Region 3 Information (refer to the CFI specification or CFI publication 100)
39h 3Ah 3Bh 3Ch	0000h 0000h 0000h 0000h	Erase Block Region 4 Information (refer to the CFI specification or CFI publication 100)

Table 20. Primary Vendor-Specific Extended Query

Addresses	Data	Description
40h 41h 42h	0050h 0052h 0049h	Query-unique ASCII string "PRI"
43h	0031h	Major version number, ASCII (reflects modifications to the silicon)
44h	0033h	Minor version number, ASCII (reflects modifications to the CFI table)
45h	**TBD**	Address Sensitive Unlock (Bits 1-0) 0 = Required, 1 = Not Required Silicon Revision Number (Bits 7-2)
46h	0002h	Erase Suspend 0 = Not Supported, 1 = To Read Only, 2 = To Read & Write
47h	0001h	Sector Protect 0 = Not Supported, X = Number of sectors in per group
48h	0001h	Sector Temporary Unprotect 00 = Not Supported, 01 = Supported
49h	0007h (PLxxxJ)	Sector Protect/Unprotect scheme 07 = Advanced Sector Protection
4Ah	00E7h (PL127J) 00E7h (PL129J) 0077h (PL064J) 003Fh (PL032J)	Simultaneous Operation 00 = Not Supported, X = Number of Sectors excluding Bank 1
4Bh	0000h	Burst Mode Type 00 = Not Supported, 01 = Supported
4Ch	0002h (PLxxxJ)	Page Mode Type 00 = Not Supported, 01 = 4 Word Page, 02 = 8 Word Page
4Dh	0085h	ACC (Acceleration) Supply Minimum 00h = Not Supported, D7-D4: Volt, D3-D0: 100 mV
4Eh	0095h	ACC (Acceleration) Supply Maximum 00h = Not Supported, D7-D4: Volt, D3-D0: 100 mV
4Fh	0001h	Top/Bottom Boot Sector Flag 00h = Uniform device, 01h = Both top and bottom boot with write protect, 02h = Bottom Boot Device, 03h = Top Boot Device, 04h = Both Top and Bottom
50h	0001h	Program Suspend 0 = Not supported, 1 = Supported
57h	0004h	Bank Organization 00 = Data at 4Ah is zero, X = Number of Banks
58h	0027h (PL127J) 0027h (PL129J) 0017h (PL064J) 000Fh (PL032J)	Bank 1 Region Information X = Number of Sectors in Bank 1
59h	0060h (PL127J) 0060h (PL129J) 0030h (PL064J) 0018h (PL032J)	Bank 2 Region Information X = Number of Sectors in Bank 2

Table 20. Primary Vendor-Specific Extended Query (Continued)

Addresses	Data	Description
5Ah	0060h (PL127J) 0060h (PL129J) 0030h (PL064J) 0018h (PL032J)	Bank 3 Region Information X = Number of Sectors in Bank 3
5Bh	0027h (PL127J) 0027h (PL129J) 0017h (PL064J) 000Fh (PL032J)	Bank 4 Region Information X = Number of Sectors in Bank 4

Command Definitions

Writing specific address and data commands or sequences into the command register initiates device operations. Table 21 defines the valid register command sequences. Writing **incorrect address and data values** or writing them in the **improper sequence** may place the device in an unknown state. A reset command is then required to return the device to reading array data.

All addresses are latched on the falling edge of WE# or CE# (CE1# / CE2# in PL129J), whichever happens later. All data is latched on the rising edge of WE# or CE# (CE1# / CE2# in PL129J), whichever happens first. Refer to the "AC Characteristic" section section for timing diagrams.

Reading Array Data

The device is automatically set to reading array data after device power-up. No commands are required to retrieve data. Each bank is ready to read array data after completing an Embedded Program or Embedded Erase algorithm.

After the device accepts an Erase Suspend command, the corresponding bank enters the erase-suspend-read mode, after which the system can read data from any non-erase-suspended sector within the same bank. The system can read array data using the standard read timing, except that if it reads at an address within erase-suspended sectors, the device outputs status data. After completing a programming operation in the Erase Suspend mode, the system may once again read array data with the same exception. See the "Erase Suspend/Erase Resume Commands" section section for more information.

The system *must* issue the reset command to return a bank to the read (or erase-suspend-read) mode if DQ5 goes high during an active program or erase operation, or if the bank is in the autoselect mode. See the next section, "Reset Command" section, for more information.

See also "Requirements for Reading Array Data" section in the "Device Bus Operations" section section for more information. The "AC Characteristic" section table provides the read parameters, and Figure 12 shows the timing diagram.

Reset Command

Writing the reset command resets the banks to the read or erase-suspend-read mode. Address bits are don't cares for this command.

The reset command may be written between the sequence cycles in an erase command sequence before erasing begins. This resets the bank to which the system was writing to the read mode. Once erasure begins, however, the device ignores reset commands until the operation is complete.

The reset command may be written between the sequence cycles in a program command sequence before programming begins. This resets the bank to which the system was writing to the read mode. If the program command sequence is written to a bank that is in the Erase Suspend mode, writing the reset command returns that bank to the erase-suspend-read mode. Once programming begins, however, the device ignores reset commands until the operation is complete.

The reset command may be written between the sequence cycles in an autoselect command sequence. Once in the autoselect mode, the reset command must be written to return to the read mode. If a bank entered the autoselect mode while in the Erase Suspend mode, writing the reset command returns that bank to the erase-suspend-read mode.

If DQ5 goes high during a program or erase operation, writing the reset command returns the banks to the read mode (or erase-suspend-read mode if that bank was in Erase Suspend).

Autoselect Command Sequence

The autoselect command sequence allows the host system to access the manufacturer and device codes, and determine whether or not a sector is protected. The autoselect command sequence may be written to an address within a bank that is either in the read or erase-suspend-read mode. The autoselect command may not be written while the device is actively programming or erasing in the other bank.

The autoselect command sequence is initiated by first writing two unlock cycles. This is followed by a third write cycle that contains the bank address and the autoselect command. The bank then enters the autoselect mode. The system may read any number of autoselect codes without reinitiating the command sequence.

Table 21 shows the address and data requirements. To determine sector protection information, the system must write to the appropriate bank address (BA) and sector address (SA). Table 4 shows the address range and bank number associated with each sector.

The system must write the reset command to return to the read mode (or erase-suspend-read mode if the bank was previously in Erase Suspend).

Enter SecSi™ Sector/Exit SecSi Sector Command Sequence

The SecSi Sector region provides a secured data area containing a random, eight word electronic serial number (ESN). The system can access the SecSi Sector region by issuing the three-cycle Enter SecSi Sector command sequence. The device continues to access the SecSi Sector region until the system issues the four-cycle Exit SecSi Sector command sequence. The Exit SecSi Sector command sequence returns the device to normal operation. The SecSi Sector is not accessible when the device is executing an Embedded Program or embedded Erase algorithm. Table 21 shows the address and data requirements for both command sequences. See also "SecSi™ (Secured Silicon) Sector Flash Memory Region" for further information. *Note that the ACC function and unlock bypass modes are not available when the SecSi Sector is enabled.*

Word Program Command Sequence

Programming is a four-bus-cycle operation. The program command sequence is initiated by writing two unlock write cycles, followed by the program set-up command. The program address and data are written next, which in turn initiate the Embedded Program algorithm. The system is *not* required to provide further controls or timings. The device automatically provides internally generated program pulses and verifies the programmed cell margin. Table 21 shows the address and data requirements for the program command sequence. *Note that the SecSi Sector, autoselect, and CFI functions are unavailable when a [program/erase] operation is in progress.*

When the Embedded Program algorithm is complete, that bank then returns to the read mode and addresses are no longer latched. The system can determine the status of the program operation by using DQ7, DQ6, or RY/BY#. Refer to the "Write Operation Status" section section for information on these status bits.

Any commands written to the device during the Embedded Program Algorithm are ignored. Note that a **hardware reset** immediately terminates the program

operation. The program command sequence should be reinitiated once that bank has returned to the read mode, to ensure data integrity. Note that the SecSi Sector, autoselect and CFI functions are unavailable when the SecSi Sector is enabled.

Programming is allowed in any sequence and across sector boundaries. **A bit cannot be programmed from "0" back to a "1."** Attempting to do so may cause that bank to set DQ5 = 1, or cause the DQ7 and DQ6 status bits to indicate the operation was successful. However, a succeeding read will show that the data is still "0." Only erase operations can convert a "0" to a "1."

Unlock Bypass Command Sequence

The unlock bypass feature allows the system to program data to a bank faster than using the standard program command sequence. The unlock bypass command sequence is initiated by first writing two unlock cycles. This is followed by a third write cycle containing the unlock bypass command, 20h. That bank then enters the unlock bypass mode. A two-cycle unlock bypass program command sequence is all that is required to program in this mode. The first cycle in this sequence contains the unlock bypass program command, A0h; the second cycle contains the program address and data. Additional data is programmed in the same manner. This mode dispenses with the initial two unlock cycles required in the standard program command sequence, resulting in faster total programming time. Table 21 shows the requirements for the command sequence.

During the unlock bypass mode, only the Unlock Bypass Program and Unlock Bypass Reset commands are valid. To exit the unlock bypass mode, the system must issue the two-cycle unlock bypass reset command sequence. (See Table 22)

The device offers accelerated program operations through the WP#/ACC pin. When the system asserts V_{HH} on the WP#/ACC pin, the device automatically enters the Unlock Bypass mode. The system may then write the two-cycle Unlock Bypass program command sequence. The device uses the higher voltage on the WP#/ACC pin to accelerate the operation. *Note that the WP#/ACC pin must not be at V_{HH} any operation other than accelerated programming, or device damage may result. In addition, the WP#/ACC pin must not be left floating or unconnected; inconsistent behavior of the device may result.*

4 illustrates the algorithm for the program operation. Refer to the "Erase/Program Operations" section table in the AC Characteristics section for parameters, and Figure 14 for timing diagrams.

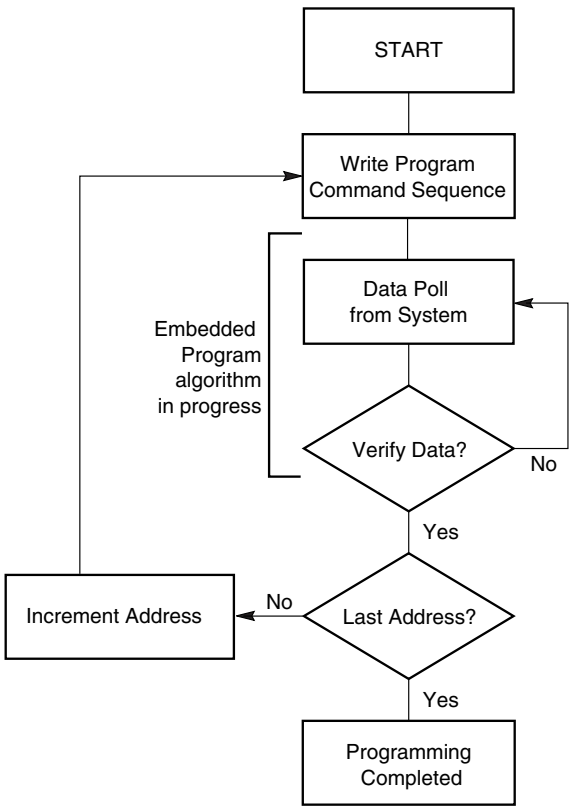

Note: *See Table 21 for program command sequence.*

Figure 4. Program Operation

Chip Erase Command Sequence

Chip erase is a six bus cycle operation. The chip erase command sequence is initiated by writing two unlock cycles, followed by a set-up command. Two additional unlock write cycles are then followed by the chip erase command, which in turn invokes the Embedded Erase algorithm. The device does *not* require the system to preprogram prior to erase. The Embedded Erase algorithm automatically preprograms and verifies the entire memory for an all zero data pattern prior to electrical erase. The system is not required to provide any controls or timings during these operations. Table 21 shows the address and data requirements for the chip erase command sequence.

When the Embedded Erase algorithm is complete, that bank returns to the read mode and addresses are no longer latched. The system can determine the status of the erase operation by using DQ7, DQ6, DQ2, or RY/BY#. Refer to the "Write Operation Status" section section for information on these status bits.

Any commands written during the chip erase operation are ignored. *Note that SecSi Sector, autoselect, and CFI functions are unavailable when a [program/erase] operation is in progress.* However, note that a **hardware reset** immediately terminates the erase operation. If that occurs, the chip erase command sequence should be reinitiated once that bank has returned to reading array data, to ensure data integrity.

5 illustrates the algorithm for the erase operation. Refer to the "Erase/Program Operations" section tables in the AC Characteristics section for parameters, and Figure 16 section for timing diagrams.

Sector Erase Command Sequence

Sector erase is a six bus cycle operation. The sector erase command sequence is initiated by writing two unlock cycles, followed by a set-up command. Two additional unlock cycles are written, and are then followed by the address of the sector to be erased, and the sector erase command. Table 21 shows the address and data requirements for the sector erase command sequence.

The device does *not* require the system to preprogram prior to erase. The Embedded Erase algorithm automatically programs and verifies the entire memory for an all zero data pattern prior to electrical erase. The system is not required to provide any controls or timings during these operations.

After the command sequence is written, a sector erase time-out of 50 µs occurs. During the time-out period, additional sector addresses and sector erase commands may be written. Loading the sector erase buffer may be done in any sequence, and the number of sectors may be from one sector to all sectors. The time between these additional cycles must be less than 50 µs, otherwise erasure may begin. Any sector erase address and command following the exceeded time-out may or may not be accepted. It is recommended that processor interrupts be disabled during this time to ensure all commands are accepted. The interrupts can be re-enabled after the last Sector Erase command is written. **If any command other than 30h, B0h, F0h is input during the time-out period, the normal operation will not be guaranteed.** The system must rewrite the command sequence and any additional addresses and commands. *Note that SecSi Sector, autoselect, and CFI functions are unavailable when a [program/erase] operation is in progress.*

The system can monitor DQ3 to determine if the sector erase timer has timed out (See the section on DQ3: Sector Erase Timer). The time-out begins from the rising edge of the final WE# pulse in the command sequence.

When the Embedded Erase algorithm is complete, the bank returns to reading array data and addresses are no longer latched. Note that while the Embedded Erase operation is in progress, the system can read data from the non-erasing bank. The system can determine the status of the erase operation by reading DQ7, DQ6, DQ2, or RY/BY# in the erasing bank. Refer to the "Write Operation Status" section section for information on these status bits.

Once the sector erase operation has begun, only the Erase Suspend command is valid. All other commands are ignored. However, note that a **hardware reset** immediately terminates the erase operation. If that occurs, the sector erase command sequence should be reinitiated once that bank has returned to reading array data, to ensure data integrity.

5 illustrates the algorithm for the erase operation. Refer to the "Erase/Program Operations" section tables in the AC Characteristics section for parameters, and Figure 16 section for timing diagrams.

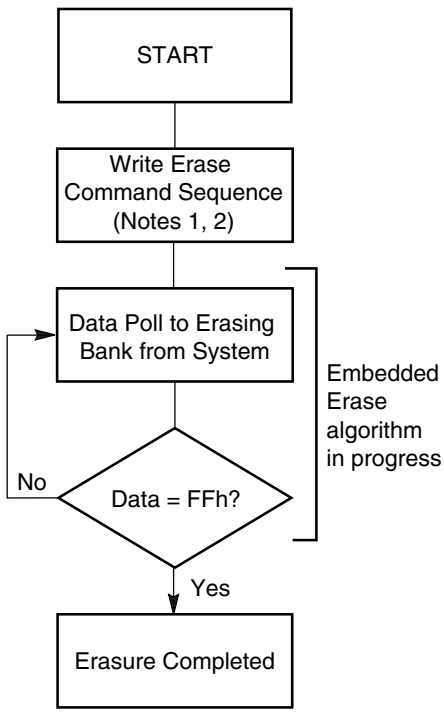

Notes:
1. *See Table 21 for erase command sequence.*
2. *See the section on DQ3 for information on the sector erase timer.*

Figure 5. Erase Operation

Erase Suspend/Erase Resume Commands

The Erase Suspend command, B0h, allows the system to interrupt a sector erase operation and then read data from, or program data to, any sector not selected for erasure. The bank address is required when writing this command. This command is valid only during the sector erase operation, including the 80 µs time-out period during the sector erase command sequence. The Erase Suspend command is ignored if written during the chip erase operation or Embedded Program algorithm.

When the Erase Suspend command is written during the sector erase operation, the device requires a maximum of 35 µs to suspend the erase operation. However, when the Erase Suspend command is written during the sector erase time-out, the device immediately terminates the time-out period and suspends the erase operation. Addresses are "don't-cares" when writing the Erase suspend command.

After the erase operation has been suspended, the bank enters the erase-suspend-read mode. The system can read data from or program data to any sector not selected for erasure. (The device "erase suspends" all sectors selected for erasure.) Reading at any address within erase-suspended sectors produces status information on DQ7–DQ0. The system can use DQ7, or DQ6 and DQ2 together, to determine if a sector is actively erasing or is erase-suspended. Refer to the "Write Operation Status" section section for information on these status bits.

After an erase-suspended program operation is complete, the bank returns to the erase-suspend-read mode. The system can determine the status of the program

operation using the DQ7 or DQ6 status bits, just as in the standard Word Program operation. Refer to the "Write Operation Status" section section for more information.

In the erase-suspend-read mode, the system can also issue the autoselect command sequence. The device allows reading autoselect codes even at addresses within erasing sectors, since the codes are not stored in the memory array. When the device exits the autoselect mode, the device reverts to the Erase Suspend mode, and is ready for another valid operation. Refer to the "SecSiTM Sector Addresses" section and the "Autoselect Command Sequence" section sections for details.

To resume the sector erase operation, the system must write the Erase Resume command (address bits are don't care). The bank address of the erase-suspended bank is required when writing this command. Further writes of the Resume command are ignored. Another Erase Suspend command can be written after the chip has resumed erasing.

If the Persistent Sector Protection Mode Locking Bit is verified as programmed without margin, the Persistent Sector Protection Mode Locking Bit Program Command should be reissued to improve program margin. If the SecSi Sector Protection Bit is verified as programmed without margin, the SecSi Sector Protection Bit Program Command should be reissued to improve program margin. µµ*After programming a PPB, two additional cycles are needed to determine whether the PPB has been programmed with margin. If the PPB has been programmed without margin, the program command should be reissued to improve the program margin. Also note that the total number of PPB program/erase cycles is limited to 100 cycles. Cycling the PPBs beyond 100 cycles is not guaranteed.*

After erasing the PPBs, two additional cycles are needed to determine whether the PPB has been erased with margin. If the PPBs has been erased without margin, the erase command should be reissued to improve the program margin. The programming of either the PPB or DYB for a given sector or sector group can be verified by writing a Sector Protection Status command to the device.

Note that there is no single command to independently verify the programming of a DYB for a given sector group.

Command Definitions Tables

Table 21. Memory Array Command Definitions

Command (Notes)		Cycles	Bus Cycles (Notes 1–4)											
			Addr	Data	Addr	Data	Addr	Data	Addr	Data	Addr	Data	Addr	Data
Read (Note 5)		1	RA	RD										
Reset (Note 6)		1	XXX	F0										
Autoselect (Note 7)	Manufacturer ID	4	555	AA	2AA	55	(BA) 555	90	(BA) X00	01				
	Device ID (Note 10)	6	555	AA	2AA	55	(BA) 555	90	(BA) X01	227E	(BA) X0E	(Note 10)	(BA) X0F	(Note 10)
	SecSi Sector Factory Protect (Note 8)	4	555	AA	2AA	55	(BA) 555	90	X03	(Note 8)				
	Sector Group Protect Verify (Note 9)	4	555	AAA	2AA	55	(BA) 555	90	(SA) X02	XX00/ XX01				
Program		4	555	AA	2AA	55	555	A0	PA	PD				
Chip Erase		6	555	AA	2AA	55	555	80	555	AA	2AA	55	555	10
Sector Erase		6	555	AA	2AA	55	555	80	555	AA	2AA	55	SA	30
Program/Erase Suspend (Note 11)		1	BA	B0										
Program/Erase Resume (Note 12)		1	BA	30										
CFI Query (Note 13)		1	55	98										
Accelerated Program (Note 15)		2	XX	A0	PA	PD								
Unlock Bypass Entry (Note 15)		3	555	AA	2AA	55	555	20						
Unlock Bypass Program (Note 15)		2	XX	A0	PA	PD								
Unlock Bypass Erase (Note 15)		2	XX	80	XX	10								
Unlock Bypass CFI (Notes 13, 15)		1	XX	98										
Unlock Bypass Reset (Note 15)		2	XXX	90	XXX	00								

Legend:

BA = Address of bank switching to autoselect mode, bypass mode, or erase operation. Determined by PL127J: Amax:A20, PL064J and PL129J: Amax:A19, PL032J: Amax:A18.

PA = Program Address (Amax:A0). Addresses latch on falling edge of WE# or CE# (CE1#/CE2# for PL129J) pulse, whichever happens later.

PD = Program Data (DQ15:DQ0) written to location PA. Data latches on rising edge of WE# or CE# (CE1#/CE2# for PL129J) pulse, whichever happens first.

RA = Read Address (Amax:A0).

RD = Read Data (DQ15:DQ0) from location RA.

SA = Sector Address (Amax:A12) for verifying (in autoselect mode) or erasing.

WD = Write Data. See "Configuration Register" definition for specific write data. Data latched on rising edge of WE#.

X = Don't care

Notes:

1. *See Table 1 for description of bus operations.*
2. *All values are in hexadecimal.*
3. *Shaded cells in table denote read cycles. All other cycles are write operations.*
4. *During unlock and command cycles, when lower address bits are 555 or 2AAh as shown in table, address bits higher than A11 (except where BA is required) and data bits higher than DQ7 are don't cares.*
5. *No unlock or command cycles required when bank is reading array data.*
6. *The Reset command is required to return to reading array (or to erase-suspend-read mode if previously in Erase Suspend) when bank is in autoselect mode, or if DQ5 goes high (while bank is providing status information).*
7. *Fourth cycle of autoselect command sequence is a read cycle. System must provide bank address to obtain manufacturer ID or device ID information. See "Autoselect Command Sequence" section section for more information.*
8. *The data is DQ6=1 for factory and customer locked and DQ7=1 for factory locked.*
9. *The data is 00h for an unprotected sector group and 01h for a protected sector group.*
10. *Device ID must be read across cycles 4, 5, and 6. PL127J (X0Eh = 2220h, X0Fh = 2200h), PL129J (X0Eh = 2221h, X0Fh = 2200h),PL064J (X0Eh = 2202h, X0Fh = 2201h), PL032J (X0Eh = 220Ah, X0Fh = 2201h).*

11. *System may read and program in non-erasing sectors, or enter autoselect mode, when in Program/Erase Suspend mode. Program/Erase Suspend command is valid only during a sector erase operation, and requires bank address.*
12. *Program/Erase Resume command is valid only during Erase Suspend mode, and requires bank address.*
13. *Command is valid when device is ready to read array data or when device is in autoselect mode.*
14. *WP#/ACC must be at V_{ID} during the entire operation of command.*
15. *Unlock Bypass Entry command is required prior to any Unlock Bypass operation. Unlock Bypass Reset command is required to return to the reading array.*

Table 22. Sector Protection Command Definitions

Command (Notes)	Cycles	Bus Cycles (Notes 1-4)													
		Addr	Data	Addr	Data	Addr	Data	Addr	Data	Addr	Data	Addr	Data	Addr	Data
Reset	1	XXX	F0												
SecSi Sector Entry	3	555	AA	2AA	55	555	88								
SecSi Sector Exit	4	555	AA	2AA	55	555	90	XX	00						
SecSi Protection Bit Program (Notes 5, 6)	6	555	AA	2AA	55	555	60	OW	68	OW	48	OW	RD(0)		
SecSi Protection Bit Status	5	555	AA	2AA	55	555	60	OW	48	OW	RD(0)				
Password Program (Notes 5, 7, 8)	4	555	AA	2AA	55	555	38	XX[0-3]	PD[0-3]						
Password Verify (Notes 6, 8, 9)	4	555	AA	2AA	55	555	C8	PWA[0-3]	PWD[0-3]						
Password Unlock (Notes 7, 10, 11)	7	555	AA	2AA	55	555	28	PWA[0]	PWD[0]	PWA[1]	PWD[1]	PWA[2]	PWD[2]	PWA[3]	PWD[3]
PPB Program (Notes 5, 6, 12)	6	555	AA	2AA	55	555	60	(SA)WP	68	(SA)WP	48	(SA)WP	RD(0)		
PPB Status	4	555	AA	2AA	55	555	90	(SA)WP	RD(0)						
All PPB Erase (Notes 5, 6, 13, 14)	6	555	AA	2AA	55	555	60	WP	60	(SA)	40	(SA)WP	RD(0)		
PPB Lock Bit Set	3	555	AA	2AA	55	555	78								
PPB Lock Bit Status (Note 15)	4	555	AA	2AA	55	555	58	SA	RD(1)						
DYB Write (Note 7)	4	555	AA	2AA	55	555	48	SA	X1						
DYB Erase (Note 7)	4	555	AA	2AA	55	555	48	SA	X0						
DYB Status (Note 6)	4	555	AA	2AA	55	555	58	SA	RD(0)						
PPMLB Program (Notes 5, 6, 12)	6	555	AA	2AA	55	555	60	PL	68	PL	48	PL	RD(0)		
PPMLB Status (Note 5)	5	555	AA	2AA	55	555	60	PL	48	PL	RD(0)				
SPMLB Program (Notes 5, 6, 12)	6	555	AA	2AA	55	555	60	SL	68	SL	48	SL	RD(0)		
SPMLB Status (Note 5)	5	555	AA	2AA	55	555	60	SL	48	SL	RD(0)				

Legend:

DYB = Dynamic Protection Bit

OW = Address (A7:A0) is (00011010)

PD[3:0] = Password Data (1 of 4 portions)

PPB = Persistent Protection Bit

PWA = Password Address. A1:A0 selects portion of password.

PWD = Password Data being verified.

PL = Password Protection Mode Lock Address (A7:A0) is (00001010)

RD(0) = Read Data DQ0 for protection indicator bit.

RD(1) = Read Data DQ1 for PPB Lock status.

SA = Sector Address where security command applies. Address bits Amax:A12 uniquely select any sector.

SL = Persistent Protection Mode Lock Address (A7:A0) is (00010010)

WP = PPB Address (A7:A0) is (00000010)

X = Don't care

PPMLB = Password Protection Mode Locking Bit

SPMLB = Persistent Protection Mode Locking Bit

Notes:

1. *See Table 1 for description of bus operations.*
2. *All values are in hexadecimal.*
3. *Shaded cells in table denote read cycles. All other cycles are write operations.*
4. *During unlock and command cycles, when lower address bits are 555 or 2AAh as shown in table, address bits higher than A11 (except where BA is required) and data bits higher than DQ7 are don't cares.*
5. *The reset command returns device to reading array.*
6. *Cycle 4 programs the addressed locking bit. Cycles 5 and 6 validate bit has been fully programmed when DQ0 = 1. If DQ0 = 0 in cycle 6, program command must be issued and verified again.*
7. *Data is latched on the rising edge of WE#.*
8. *Entire command sequence must be entered for each portion of password.*
9. *Command sequence returns FFh if PPMLB is set.*
10. *The password is written over four consecutive cycles, at addresses 0-3.*
11. *A 2 µs timeout is required between any two portions of password.*
12. *A 100 µs timeout is required between cycles 4 and 5.*
13. *A 1.2 ms timeout is required between cycles 4 and 5.*
14. *Cycle 4 erases all PPBs. Cycles 5 and 6 validate bits have been fully erased when DQ0 = 0. If DQ0 = 1 in cycle 6, erase command must be issued and verified again. Before issuing erase command, all PPBs should be programmed to prevent PPB overerasure.*
15. *DQ1 = 1 if PPB locked, 0 if unlocked.*

Write Operation Status

The device provides several bits to determine the status of a program or erase operation: DQ2, DQ3, DQ5, DQ6, and DQ7. Table 23 and the following subsections describe the function of these bits. DQ7 and DQ6 each offer a method for determining whether a program or erase operation is complete or in progress. The device also provides a hardware-based output signal, RY/BY#, to determine whether an Embedded Program or Erase operation is in progress or has been completed.

DQ7: Data# Polling

The Data# Polling bit, DQ7, indicates to the host system whether an Embedded Program or Erase algorithm is in progress or completed, or whether a bank is in Erase Suspend. Data# Polling is valid after the rising edge of the final WE# pulse in the command sequence.

During the Embedded Program algorithm, the device outputs on DQ7 the complement of the datum programmed to DQ7. This DQ7 status also applies to programming during Erase Suspend. When the Embedded Program algorithm is complete, the device outputs the datum programmed to DQ7. The system must provide the program address to read valid status information on DQ7. If a program address falls within a protected sector, Data# Polling on DQ7 is active for approximately 1 µs, then that bank returns to the read mode.

During the Embedded Erase algorithm, Data# Polling produces a "0" on DQ7. When the Embedded Erase algorithm is complete, or if the bank enters the Erase Suspend mode, Data# Polling produces a "1" on DQ7. The system must provide an address within any of the sectors selected for erasure to read valid status information on DQ7.

After an erase command sequence is written, if all sectors selected for erasing are protected, Data# Polling on DQ7 is active for approximately 400 µs, then the bank returns to the read mode. If not all selected sectors are protected, the Embedded Erase algorithm erases the unprotected sectors, and ignores the selected sectors that are protected. However, if the system reads DQ7 at an address within a protected sector, the status may not be valid.

When the system detects DQ7 has changed from the complement to true data, it can read valid data at DQ15–DQ0 on the *following* read cycles. Just prior to the completion of an Embedded Program or Erase operation, DQ7 may change asynchronously with DQ15–DQ0 while Output Enable (OE#) is asserted low. That is, the device may change from providing status information to valid data on DQ7. Depending on when the system samples the DQ7 output, it may read the status or valid data. Even if the device has completed the program or erase operation and DQ7 has valid data, the data outputs on DQ15–DQ0 may be still invalid. Valid data on DQ15–DQ0 will appear on successive read cycles.

Table 23 shows the outputs for Data# Polling on DQ7. 6 shows the Data# Polling algorithm. 18 in the "AC Characteristic" section section shows the Data# Polling timing diagram.

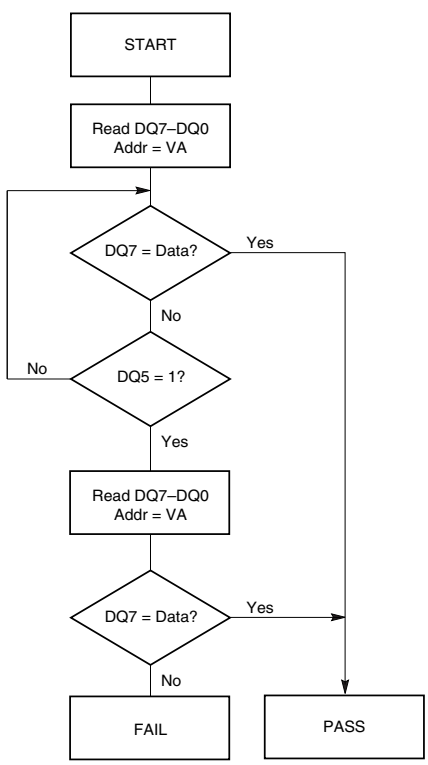

Notes:

1. *VA = Valid address for programming. During a sector erase operation, a valid address is any sector address within the sector being erased. During chip erase, a valid address is any non-protected sector address.*
2. *DQ7 should be rechecked even if DQ5 = "1" because DQ7 may change simultaneously with DQ5.*

Figure 6. Data# Polling Algorithm

RY/BY#: Ready/Busy#

The RY/BY# is a dedicated, open-drain output pin which indicates whether an Embedded Algorithm is in progress or complete. The RY/BY# status is valid after the rising edge of the final WE# pulse in the command sequence. Since RY/BY# is an open-drain output, several RY/BY# pins can be tied together in parallel with a pull-up resistor to V_{CC}.

If the output is low (Busy), the device is actively erasing or programming. (This includes programming in the Erase Suspend mode.) If the output is high (Ready), the device is in the read mode, the standby mode, or one of the banks is in the erase-suspend-read mode.

Table 23 shows the outputs for RY/BY#.

DQ6: Toggle Bit I

Toggle Bit I on DQ6 indicates whether an Embedded Program or Erase algorithm is in progress or complete, or whether the device has entered the Erase Suspend mode. Toggle Bit I may be read at any address, and is valid after the rising edge of the final WE# pulse in the command sequence (prior to the program or erase operation), and during the sector erase time-out.

During an Embedded Program or Erase algorithm operation, successive read cycles to any address cause DQ6 to toggle. The system may use either OE# or CE# to control the read cycles. When the operation is complete, DQ6 stops toggling.

After an erase command sequence is written, if all sectors selected for erasing are protected, DQ6 toggles for approximately 400 µs, then returns to reading array data. If not all selected sectors are protected, the Embedded Erase algorithm erases the unprotected sectors, and ignores the selected sectors that are protected.

The system can use DQ6 and DQ2 together to determine whether a sector is actively erasing or is erase-suspended. When the device is actively erasing (that is, the Embedded Erase algorithm is in progress), DQ6 toggles. When the device enters the Erase Suspend mode, DQ6 stops toggling. However, the system must also use DQ2 to determine which sectors are erasing or erase-suspended. Alternatively, the system can use DQ7 (see the "DQ7: Data# Polling" section).

If a program address falls within a protected sector, DQ6 toggles for approximately 1 µs after the program command sequence is written, then returns to reading array data.

DQ6 also toggles during the erase-suspend-program mode, and stops toggling once the Embedded Program algorithm is complete.

Table 23 shows the outputs for Toggle Bit I on DQ6. Figure 7 shows the toggle bit algorithm. Figure 19 in "Read Operation Timings" shows the toggle bit timing diagrams. Figure 20 shows the differences between DQ2 and DQ6 in graphical form. See also the "DQ2: Toggle Bit II" section.

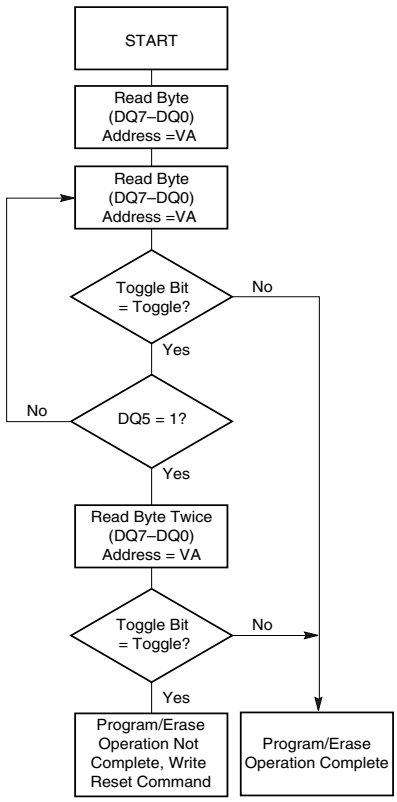

Note: *The system should recheck the toggle bit even if DQ5 = "1" because the toggle bit may stop toggling as DQ5 changes to "1." See the "DQ6: Toggle Bit I" section and "DQ2: Toggle Bit II" section for more information.*

Figure 7. Toggle Bit Algorithm

DQ2: Toggle Bit II

The "Toggle Bit II" on DQ2, when used with DQ6, indicates whether a particular sector is actively erasing (that is, the Embedded Erase algorithm is in progress), or whether that sector is erase-suspended. Toggle Bit II is valid after the rising edge of the final WE# pulse in the command sequence.

DQ2 toggles when the system reads at addresses within those sectors that have been selected for erasure. (The system may use either OE# or CE# (CE1# / CE2# for PL129J) to control the read cycles.) But DQ2 cannot distinguish whether the sector is actively erasing or is erase-suspended. DQ6, by comparison, indicates whether the device is actively erasing, or is in Erase Suspend, but cannot distinguish which sectors are selected for erasure. Thus, both status bits are required for sector and mode information. Refer to Table 23 to compare outputs for DQ2 and DQ6.

Figure 7 shows the toggle bit algorithm in flowchart form, and the "DQ2: Toggle Bit II" section explains the algorithm. See also the "DQ6: Toggle Bit I" section. Figure 19 shows the toggle bit timing diagram. Figure 20 shows the differences between DQ2 and DQ6 in graphical form.

Reading Toggle Bits DQ6/DQ2

Refer to Figure 7 for the following discussion. Whenever the system initially begins reading toggle bit status, it must read DQ7–DQ0 at least twice in a row to

determine whether a toggle bit is toggling. Typically, the system would note and store the value of the toggle bit after the first read. After the second read, the system would compare the new value of the toggle bit with the first. If the toggle bit is not toggling, the device has completed the program or erase operation. The system can read array data on DQ7–DQ0 on the following read cycle.

However, if after the initial two read cycles, the system determines that the toggle bit is still toggling, the system also should note whether the value of DQ5 is high (see the section on DQ5). If it is, the system should then determine again whether the toggle bit is toggling, since the toggle bit may have stopped toggling just as DQ5 went high. If the toggle bit is no longer toggling, the device has successfully completed the program or erase operation. If it is still toggling, the device did not completed the operation successfully, and the system must write the reset command to return to reading array data.

The remaining scenario is that the system initially determines that the toggle bit is toggling and DQ5 has not gone high. The system may continue to monitor the toggle bit and DQ5 through successive read cycles, determining the status as described in the previous paragraph. Alternatively, it may choose to perform other system tasks. In this case, the system must start at the beginning of the algorithm when it returns to determine the status of the operation (top of Figure 7).

DQ5: Exceeded Timing Limits

DQ5 indicates whether the program or erase time has exceeded a specified internal pulse count limit. Under these conditions DQ5 produces a "1," indicating that the program or erase cycle was not successfully completed.

The device may output a "1" on DQ5 if the system tries to program a "1" to a location that was previously programmed to "0." **Only an erase operation can change a "0" back to a "1."** Under this condition, the device halts the operation, and when the timing limit has been exceeded, DQ5 produces a "1."

Under both these conditions, the system must write the reset command to return to the read mode (or to the erase-suspend-read mode if a bank was previously in the erase-suspend-program mode).

DQ3: Sector Erase Timer

After writing a sector erase command sequence, the system may read DQ3 to determine whether or not erasure has begun. (The sector erase timer does not apply to the chip erase command.) If additional sectors are selected for erasure, the entire time-out also applies after each additional sector erase command. When the time-out period is complete, DQ3 switches from a "0" to a "1." See also the "Sector Erase Command Sequence" section.

After the sector erase command is written, the system should read the status of DQ7 (Data# Polling) or DQ6 (Toggle Bit I) to ensure that the device has accepted the command sequence, and then read DQ3. If DQ3 is "1," the Embedded Erase algorithm has begun; all further commands (except Erase Suspend) are ignored until the erase operation is complete. If DQ3 is "0," the device will accept additional sector erase commands. To ensure the command has been accepted, the system software should check the status of DQ3 prior to and following each subsequent sector erase command. If DQ3 is high on the second status check, the last command might not have been accepted.

Table 23 shows the status of DQ3 relative to the other status bits.

Table 23. Write Operation Status

Status			DQ7 (Note 2)	DQ6	DQ5 (Note 1)	DQ3	DQ2 (Note 2)	RY/BY#
Standard Mode	Embedded Program Algorithm		DQ7#	Toggle	0	N/A	No toggle	0
	Embedded Erase Algorithm		0	Toggle	0	1	Toggle	0
Erase Suspend Mode	Erase-Suspend-Read	Erase Suspended Sector	1	No toggle	0	N/A	Toggle	1
		Non-Erase Suspended Sector	Data	Data	Data	Data	Data	1
	Erase-Suspend-Program		DQ7#	Toggle	0	N/A	N/A	0

Notes:

1. *DQ5 switches to '1' when an Embedded Program or Embedded Erase operation has exceeded the maximum timing limits. Refer to the section on DQ5 for more information.*
2. *DQ7 and DQ2 require a valid address when reading status information. Refer to the appropriate subsection for further details.*
3. *When reading write operation status bits, the system must always provide the bank address where the Embedded Algorithm is in progress. The device outputs array data if the system addresses a non-busy bank.*

Absolute Maximum Ratings

Storage Temperature Plastic Packages . . . . . –65°C to +150°C

Ambient Temperature with Power Applied . . . . . –65°C to +125°C

Voltage with Respect to Ground

V_{CC} (Note 1) . . . . . –0.5 V to +4.0 V

A9, OE#, and RESET# (Note 2) . . . . . –0.5 V to +13.0 V

WP#/ACC (Note 2). . . . . –0.5 V to +10.5 V

All other pins (Note 1) . . . . . –0.5 V to V_{CC} +0.5 V

Output Short Circuit Current (Note 3). . . . . 200 mA

Notes:

1. *Minimum DC voltage on input or I/O pins is –0.5 V. During voltage transitions, input or I/O pins may overshoot V_{SS} to –2.0 V for periods of up to 20 ns. Maximum DC voltage on input or I/O pins is V_{CC} +0.5 V. During voltage transitions, input or I/O pins may overshoot to V_{CC} +2.0 V for periods up to 20 ns. See Figure 8.*
2. *Minimum DC input voltage on pins A9, OE#, RESET#, and WP#/ACC is –0.5 V. During voltage transitions, A9, OE#, WP#/ACC, and RESET# may overshoot V_{SS} to –2.0 V for periods of up to 20 ns. See Figure 8. Maximum DC input voltage on pin A9, OE#, and RESET# is +12.5 V which may overshoot to +14.0 V for periods up to 20 ns. Maximum DC input voltage on WP#/ACC is +9.5 V which may overshoot to +12.0 V for periods up to 20 ns.*
3. *No more than one output may be shorted to ground at a time. Duration of the short circuit should not be greater than one second.*
4. *Stresses above those listed under "Absolute Maximum Ratings" may cause permanent damage to the device. This is a stress rating only; functional operation of the device at these or any other conditions above those indicated in the operational sections of this data sheet is not implied. Exposure of the device to absolute maximum rating conditions for extended periods may affect device reliability.*

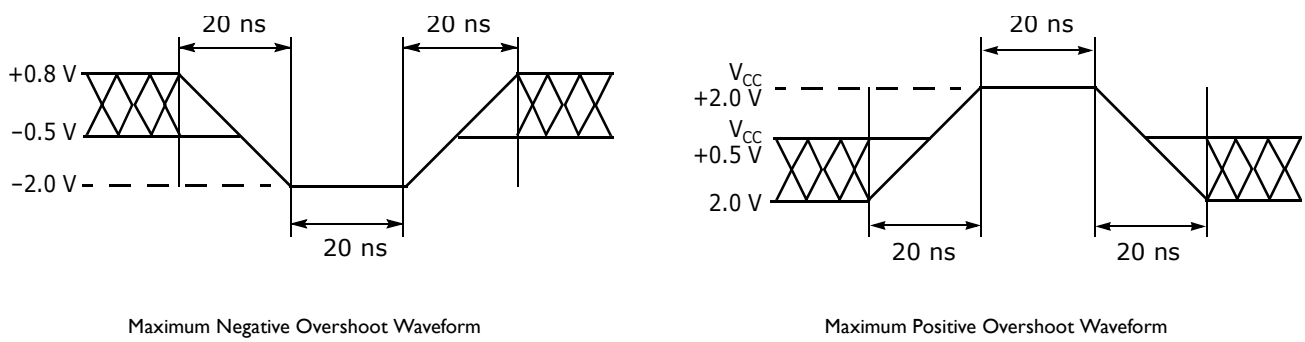

Figure 8. Maximum Overshoot Waveforms

Operating Ranges

Operating ranges define those limits between which the functionality of the device is guaranteed.

Industrial (I) Devices

Ambient Temperature (T_A) . . . . . –40°C to +85°C

Extended (E) Devices

Ambient Temperature (T_A) . . . . . –55°C to +125°C

Supply Voltages

V_{CC} . . . . . 2.7–3.6 V

V_{IO} (see Note)1.65–1.95 V (for PL127J and PL129J) or 2.7–3.6 V (for all PLxxxJ devices)

Notes:

For all AC and DC specifications, $V_{IO} = V_{CC}$; contact your local sales office for other V_{IO} options.

DC Characteristics

Table 24. CMOS Compatible

Parameter Symbol	Parameter Description	Test Conditions		Min	Typ	Max	Unit
I_{LI}	Input Load Current	$V_{IN} = V_{SS}$ to V_{CC}, $V_{CC} = V_{CC\ max}$				±1.0	µA
I_{LIT}	A9, OE#, RESET# Input Load Current	$V_{CC} = V_{CC\ max}$; V_{ID}= 12.5 V				35	µA
I_{LR}	Reset Leakage Current	$V_{CC} = V_{CC\ max}$; V_{ID}= 12.5 V				35	µA
I_{LO}	Output Leakage Current	$V_{OUT} = V_{SS}$ to V_{CC}, OE# = V_{IH} $V_{CC} = V_{CC\ max}$				±1.0	µA
I_{CC1}	V_{CC} Active Read Current (Notes 1, 2)	OE# = V_{IH}, $V_{CC} = V_{CC\ max}$ (Note 1)	5 MHz		20	30	mA
			10 MHz		45	55	
I_{CC2}	V_{CC} Active Write Current (Notes 2, 3)	OE# = V_{IH}, WE# = V_{IL}			15	25	mA
I_{CC3}	V_{CC} Standby Current (Note 2)	CE#, RESET#, WP#/ACC = V_{IO} ± 0.3 V			0.2	5	µA
I_{CC4}	V_{CC} Reset Current (Note 2)	RESET# = V_{SS} ± 0.3 V			0.2	5	µA
I_{CC5}	Automatic Sleep Mode (Notes 2, 4)	$V_{IH} = V_{IO}$ ± 0.3 V; $V_{IL} = V_{SS}$ ± 0.3 V			0.2	5	µA
I_{CC6}	V_{CC} Active Read-While-Program Current (Notes 1, 2)	OE# = V_{IH},	5 MHz		21	45	mA
			10 MHz		46	70	
I_{CC7}	V_{CC} Active Read-While-Erase Current (Notes 1, 2)	OE# = V_{IH},	5 MHz		21	45	mA
			10 MHz		46	70	
I_{CC8}	V_{CC} Active Program-While-Erase-Suspended Current (Notes 2, 5)	OE# = V_{IH}			17	25	mA
I_{CC9}	V_{CC} Active Page Read Current (Note 2)	OE# = V_{IH}, 8 word Page Read			10	15	mA
V_{IL}	Input Low Voltage	V_{IO} = 1.65–1.95 V (PL127J and PL129J)		–0.4		0.4	V
		V_{IO} = 2.7–3.6 V		–0.5		0.8	V
V_{IH}	Input High Voltage	V_{IO} = 1.65–1.95 V (PL127J AND PL129J)		V_{IO}–0.4		V_{IO}+0.4	V
		V_{IO} = 2.7–3.6 V		2.0		V_{CC}+0.3	V
V_{HH}	Voltage for ACC Program Acceleration	V_{CC} = 3.0 V ± 10%		8.5		9.5	V
V_{ID}	Voltage for Autoselect and Temporary Sector Unprotect	V_{CC} = 3.0 V ± 10%		11.5		12.5	V
V_{OL}	Output Low Voltage	I_{OL} = 100 µA, $V_{CC} = V_{CC\ min}$, V_{IO} = 1.65–1.95 V (PL127J AND PL129J)				0.1	V
		I_{OL} = 2.0 mA, $V_{CC} = V_{CC\ min}$, V_{IO} = 2.7–3.6 V				0.4	V
V_{OH}	Output High Voltage	I_{OH} = –100 µA, $V_{CC} = V_{CC\ min}$, V_{IO} = 1.65–1.95 V (PL127J AND PL129J)		V_{IO}–0.1			V
		I_{OH} = –2.0 mA, $V_{CC} = V_{CC\ min}$, V_{IO} = 2.7–3.6 V		2.4			V
V_{LKO}	Low V_{CC} Lock-Out Voltage (Note 5)			2.3		2.5	V

Notes:

1. *The I_{CC} current listed is typically less than 5 mA/MHz, with OE# at V_{IH}.*
2. *Maximum I_{CC} specifications are tested with $V_{CC} = V_{CCmax}$.*
3. *I_{CC} active while Embedded Erase or Embedded Program is in progress.*
4. *Automatic sleep mode enables the low power mode when addresses remain stable for t_{ACC} + 30 ns. Typical sleep mode current is 0.2 µA.*
5. *Not 100% tested.*
6. *In S29PL129J there are two CE# (CE1#, CE2#).*
7. *Valid CE1#/CE2# conditions: (CE1# = V_{IL}, CE2# = V_{IH},) or (CE1# = V_{IH}, CE2# = V_{IL}) or (CE1# = V_{IH}, CE2# = V_{IH})*

AC Characteristic

Test Conditions

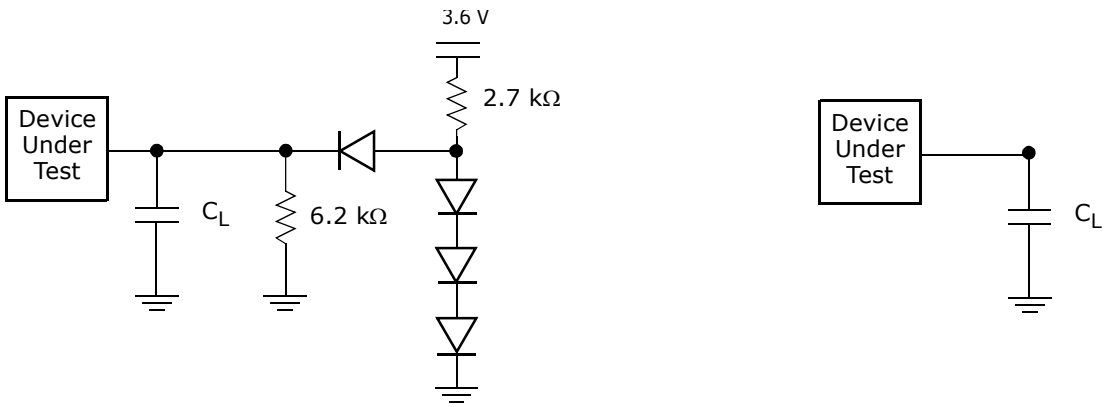

V_{IO} = 3.0 V **V_{IO} = 1.8 V (PL127J and PL129J)**

Note: *Diodes are IN3064 or equivalent*

Figure 9. Test Setups

Table 25. Test Specifications

Test Condition		All Speeds	Unit
Output Load		1 TTL gate	
Output Load Capacitance, C_L (including jig capacitance)		30	pF
Input Rise and Fall Times	V_{IO} = 1.8 V (PL127J AND PL129J)	5	ns
	V_{IO} = 3.0 V		
Input Pulse Levels	V_{IO} = 1.8 V (PL127J AND PL129J)	0.0 - 1.8	V
	V_{IO} = 3.0 V	0.0–3.0	
Input timing measurement reference levels		$V_{IO}/2$	V
Output timing measurement reference levels		$V_{IO}/2$	V

SWITCHING WAVEFORMS

Table 26. KEY TO SWITCHING WAVEFORMS

WAVEFORM	INPUTS	OUTPUTS
	Steady	
	Changing from H to L	
	Changing from L to H	
	Don't Care, Any Change Permitted	Changing, State Unknown
	Does Not Apply	Center Line is High Impedance State (High Z)

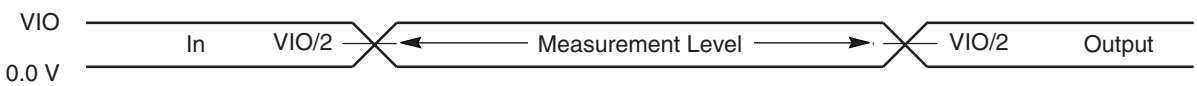

Figure 10. Input Waveforms and Measurement Levels

VCC RampRate

All DC characteristics are specified for a V_{CC} ramp rate > 1V/100 µs and V_{CC} >=V_{CCQ} - 100 mV. If the V_{CC} ramp rate is < 1V/100 µs, a hardware reset required.+

Read Operations

Table 27. Read-Only Operations

Parameter						Speed Options				
JEDEC	Std.	Description		Test Setup		55	60	65	70	Unit
t_{AVAV}	t_{RC}	Read Cycle Time (Note 1)			Min	55	60	65	70	ns
t_{AVQV}	t_{ACC}	Address to Output Delay		CE#, OE# = V_{IL}	Max	55	60	65	70	ns
t_{ELQV}	t_{CE}	Chip Enable to Output Delay		OE# = V_{IL}	Max	55	60	65	70	ns
	t_{PACC}	Page Access Time			Max	20	25	25	30	ns
t_{GLQV}	t_{OE}	Output Enable to Output Delay			Max	20	25	30		ns
t_{EHQZ}	t_{DF}	Chip Enable to Output High Z (Note 3)			Max	16				ns
t_{GHQZ}	t_{DF}	Output Enable to Output High Z (Notes 1, 3)			Max	16				ns
t_{AXQX}	t_{OH}	Output Hold Time From Addresses, CE# or OE#, Whichever Occurs First (Note 3)			Min	5				ns
	t_{OEH}	Output Enable Hold Time (Note 1)	Read		Min	0				ns
			Toggle and Data# Polling		Min	10				ns

Notes:

1. *Not 100% tested.*
2. *See Figure 9 and Table 25 for test specifications*
3. *Measurements performed by placing a 50 ohm termination on the data pin with a bias of $V_{CC}/2$. The time from OE# high to the data bus driven to $V_{CC}/2$ is taken as t_{DF}.*
4. *S29PL129J has two CE# (CE1#, CE2#).*
5. *Valid CE1# / CE2# conditions: (CE1# = V_{IL},CE2# = V_{IH}) or (CE1# = V_{IH},CE2# = V_{IL}) or (CE1# = V_{IH}, CE2# = V_{IH})*
6. *Valid CE1# / CE2# transitions: (CE1# = V_{IL},CE2# = V_{IH}) or (CE1# = V_{IH},CE2# = V_{IL}) to (CE1# = CE2# = V_{IH})*
7. *Valid CE1# / CE2# transitions: (CE1# = CE2# = V_{IH}) to (CE1# = V_{IL},CE2# = V_{IH}) or (CE1# = V_{IH},CE2# = V_{IL})*
8. *For 70pF Output Load Capacitance, 2 ns will be added to the above t_{ACC},t_{CE},t_{PACC},t_{OE} values for all speed grades*

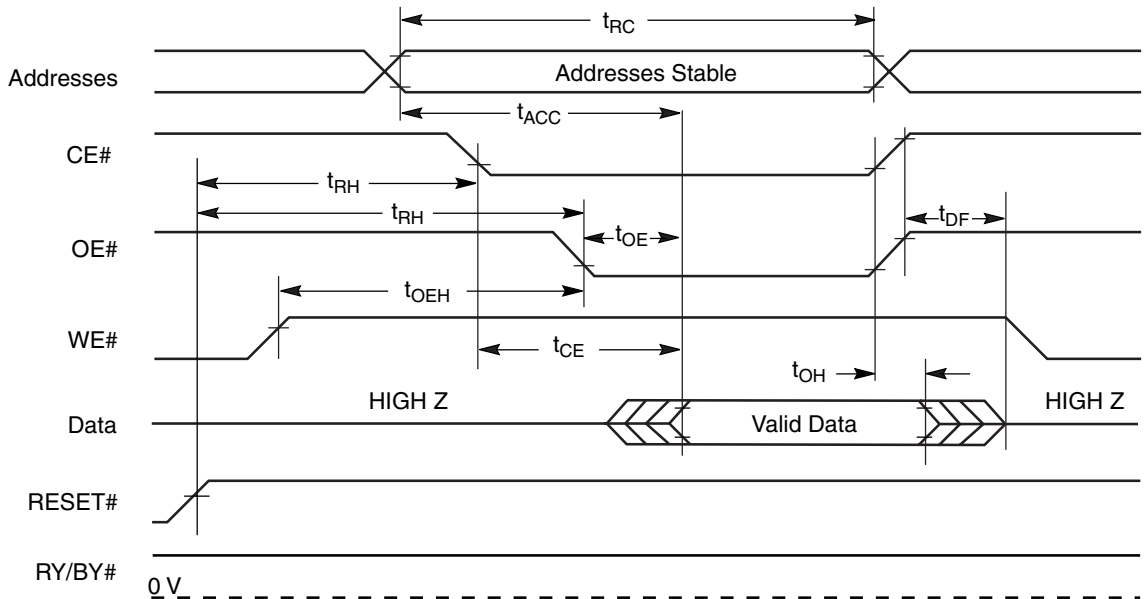

Notes:
1. *S29PL129J - During CE1# transitions, CE2# = V_{IH}; During CE2# transitions, CE1# = V_{IH}*
2. *S29PL129J - There are two CE# (CE1#, CE2#). In the above waveform CE# = CE1# or CE2#*

Figure I1. Read Operation Timings

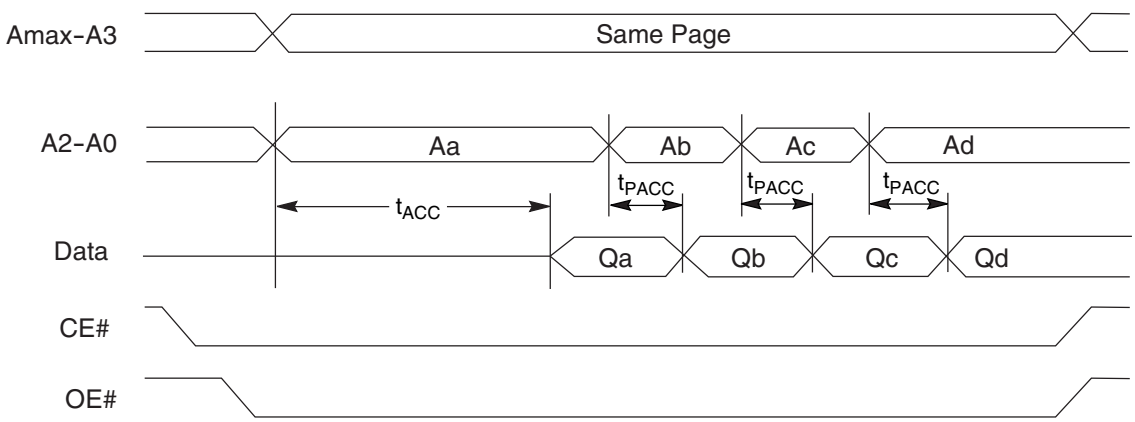

Notes:
1. *S29PL129J - During CE1# transitions, CE2# = V_{IH}; During CE2# transitions, CE1# = V_{IH}*
2. *S29PL129J - There are two CE# (CE1#, CE2#). In the above waveform CE# = CE1# or CE2#*

Figure I2. Page Read Operation Timings

Reset

Table 28. Hardware Reset (RESET#)

Parameter		Description		All Speed Options	Unit
JEDEC	Std				
	t_{Ready}	RESET# Pin Low (During Embedded Algorithms) to Read Mode (See Note)	Max	20	µs
	t_{Ready}	RESET# Pin Low (NOT During Embedded Algorithms) to Read Mode (See Note)	Max	500	ns
	t_{RP}	RESET# Pulse Width	Min	500	ns
	t_{RH}	Reset High Time Before Read (See Note)	Min	50	ns
	t_{RPD}	RESET# Low to Standby Mode	Min	20	µs
	t_{RB}	RY/BY# Recovery Time	Min	0	ns

Note: *Not 100% tested.*

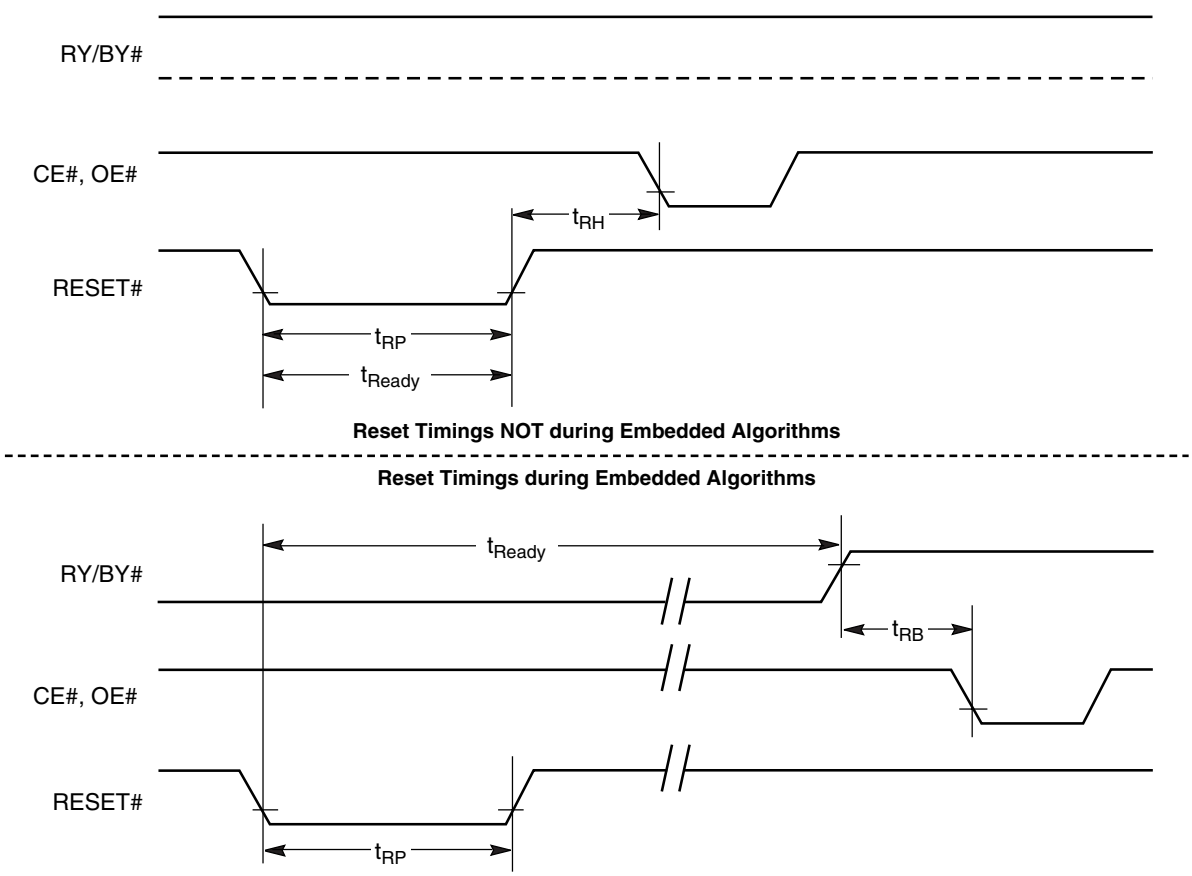

Notes:
1. *S29PL129J - During CE1# transitions, CE2# = V_{IH}; During CE2# transitions, CE1# = V_{IH}*
2. *S29PL129J - There are two CE# (CE1#, CE2#). In the below waveform CE# = CE1# or CE2#*

Figure 13. Reset Timings

Erase/Program Operations

Table 29. Erase and Program Operations

Parameter				Speed Options				
JEDEC	Std	Description		55	60	65	70	Unit
t_{AVAV}	t_{WC}	Write Cycle Time (Note 1)	Min	55	60	65	70	ns
t_{AVWL}	t_{AS}	Address Setup Time	Min	0				ns
	t_{ASO}	Address Setup Time to OE# low during toggle bit polling	Min	15				ns
t_{WLAX}	t_{AH}	Address Hold Time	Min	30	35			ns
	t_{AHT}	Address Hold Time From CE# (CE1#, CE#2 in PL129J) or OE# high during toggle bit polling	Min	0				ns
t_{DVWH}	t_{DS}	Data Setup Time	Min	25	30			ns
t_{WHDX}	t_{DH}	Data Hold Time	Min	0				ns
	t_{OEPH}	Output Enable High during toggle bit polling	Min	10				ns
t_{GHWL}	t_{GHWL}	Read Recovery Time Before Write (OE# High to WE# Low)	Min	0				ns
t_{ELWL}	t_{CS}	CE# (CE1# or CE#2 in PL129J) Setup Time	Min	0				ns
t_{WHEH}	t_{CH}	CE# (CE1# or CE#2 in PL129J) Hold Time	Min	0				ns
t_{WLWH}	t_{WP}	Write Pulse Width	Min	35				ns
t_{WHDL}	t_{WPH}	Write Pulse Width High	Min	20	25			ns
	$t_{SR/W}$	Latency Between Read and Write Operations	Min	0				ns
t_{WHWH1}	t_{WHWH1}	Programming Operation (Note 4)	Typ	6				µs
t_{WHWH1}	t_{WHWH1}	Accelerated Programming Operation (Note 4)	Typ	4				µs
t_{WHWH2}	t_{WHWH2}	Sector Erase Operation (Note 4)	Typ	0.5				sec
	t_{VCS}	V_{CC} Setup Time (Note 1)	Min	50				µs
	t_{RB}	Write Recovery Time from RY/BY#	Min	0				ns
	t_{BUSY}	Program/Erase Valid to RY/BY# Delay	Max	90				ns
			Min	35				ns

Notes:

1. *Not 100% tested.*
2. *S29PL129J - During CE1# transitions, CE2# = V_{IH}; During CE2# transitions, CE1# = V_{IH}*
3. *S29PL129J - There are two CE# (CE1#, CE2#).*
4. *See the "Erase And Programming Performance" section for more information.*

Timing Diagrams

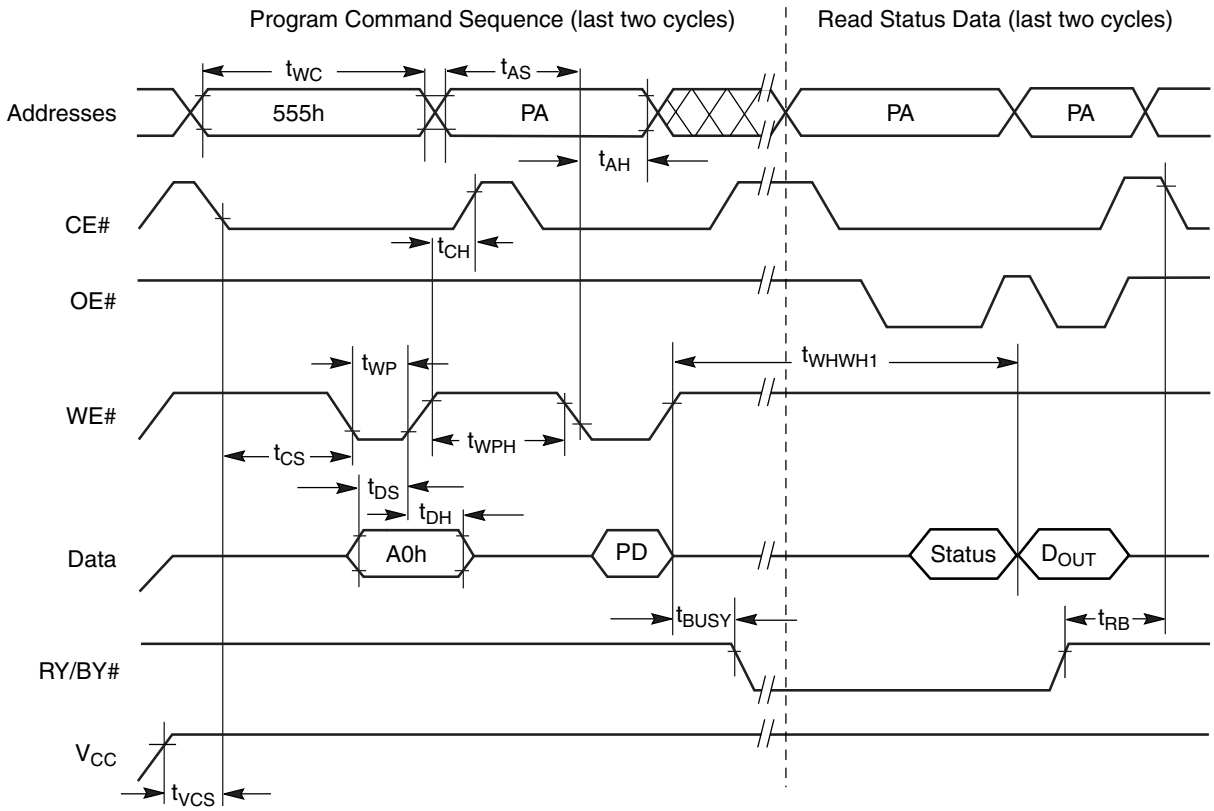

Notes:

1. *PA = program address, PD = program data, D_{OUT} is the true data at the program address*
2. *S29PL129J - During CE1# transitions, CE2# = V_{IH}; During CE2# transitions, CE1# = V_{IH}*
3. *S29PL129J - There are two CE# (CE1#, CE2#). In the above waveform CE# = CE1# or CE2#*

Figure I4. Program Operation Timings

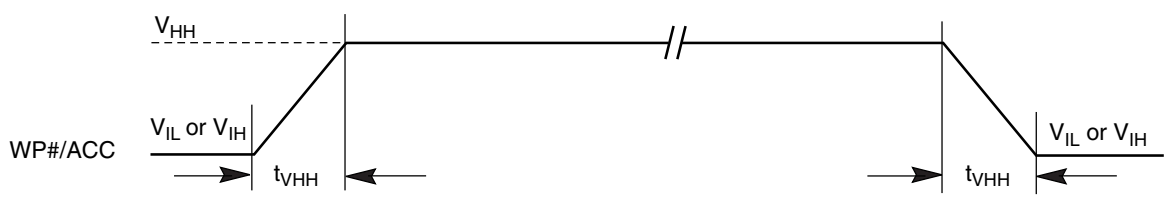

Figure I5. Accelerated Program Timing Diagram

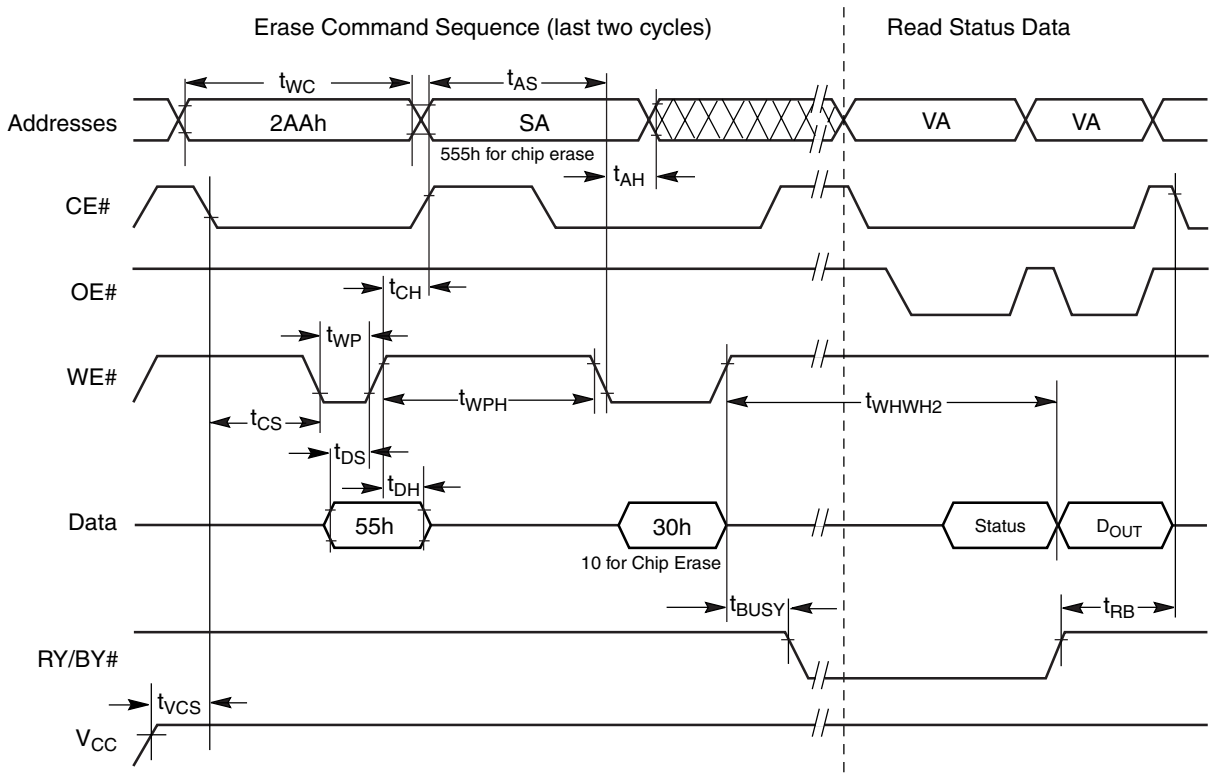

Notes:

1. *SA = sector address (for Sector Erase), VA = Valid Address for reading status data (see "Write Operation Status"*
2. *S29PL129J - During CE1# transitions, CE2# = V_{IH}; During CE2# transitions, CE1# = V_{IH}*
3. *S29PL129J - There are two CE# (CE1#, CE2#). In the above waveform CE# = CE1# or CE2#*

Figure 16. Chip/Sector Erase Operation Timings

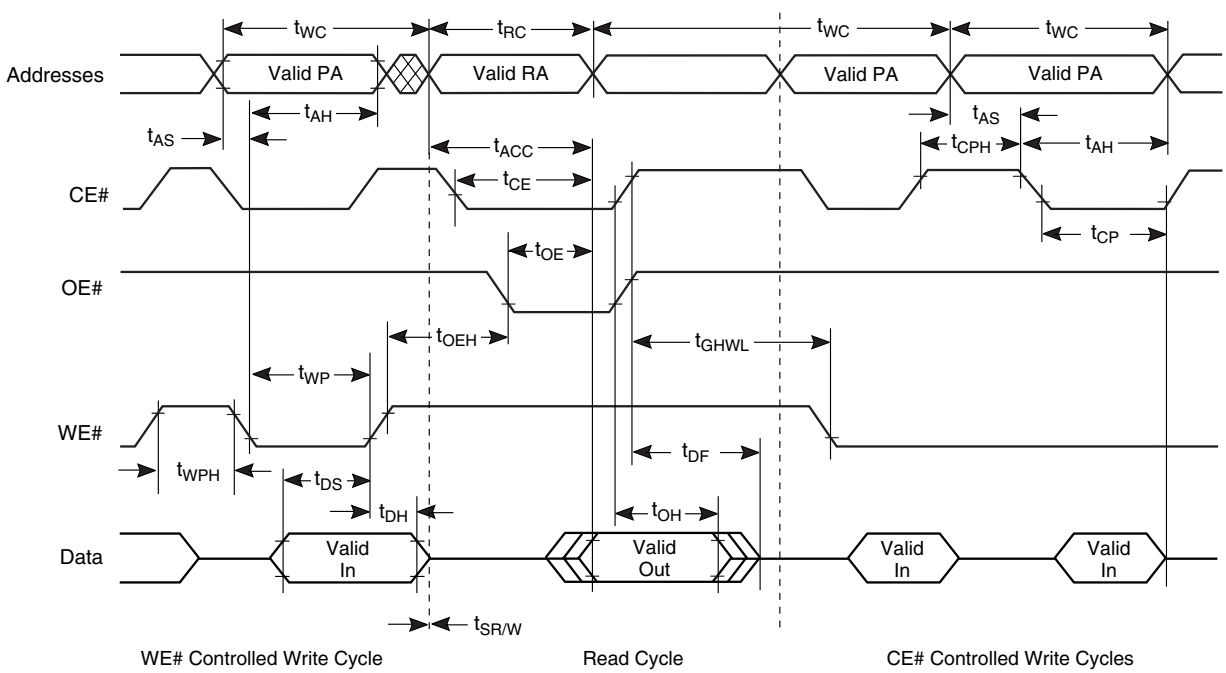

Figure 17. Back-to-back Read/Write Cycle Timings

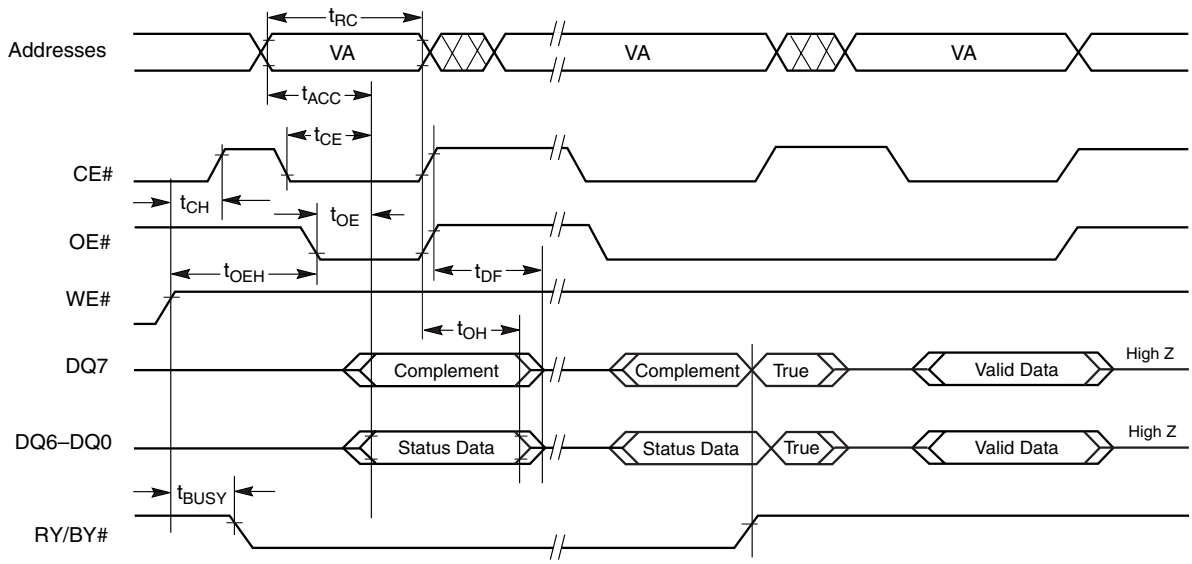

Note: *VA = Valid address. Illustration shows first status cycle after command sequence, last status read cycle, and array data read cycle*

Figure I8. Data# Polling Timings (During Embedded Algorithms)

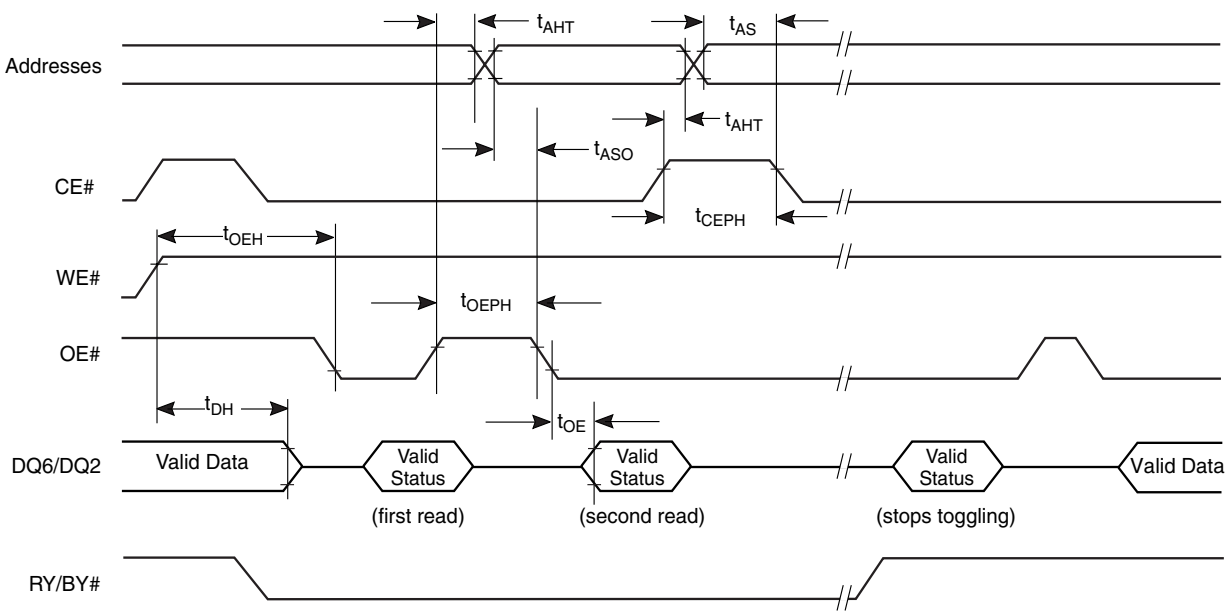

Notes:
1. *VA = Valid address; not required for DQ6. Illustration shows first two status cycle after command sequence, last status read cycle, and array data read cycle*
2. *S29PL129J - During CE1# transitions, CE2# = V_{IH}; During CE2# transitions, CE1# = V_{IH}*
3. *S29PL129J - There are two CE# (CE1#, CE2#). In the above waveform CE# = CE1# or CE2#*

Figure I9. Toggle Bit Timings (During Embedded Algorithms)

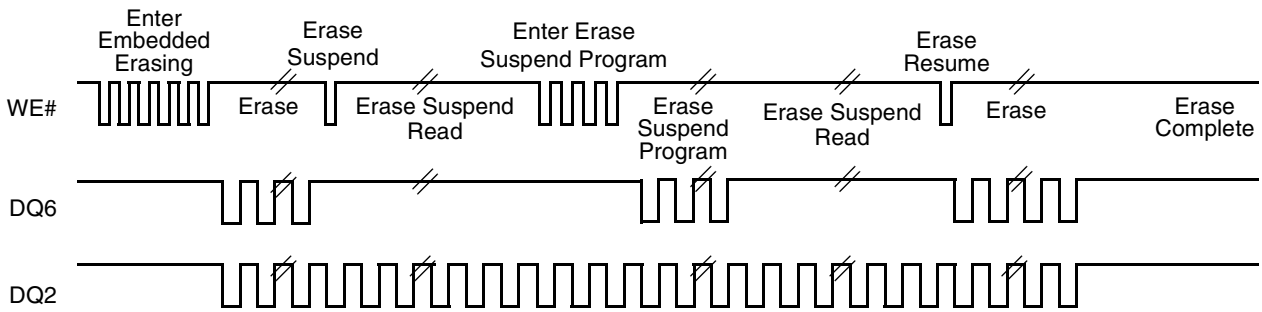

Note:*Note: DQ2 toggles only when read at an address within an erase-suspended sector. The system may use OE# or CE# to toggle DQ2 and DQ6.*

Figure 20. DQ2 vs. DQ6

Protect/Unprotect

Table 30. Temporary Sector Unprotect

Parameter					
JEDEC	**Std**	**Description**		**All Speed Options**	**Unit**
	t_{VIDR}	V_{ID} Rise and Fall Time (See Note)	Min	500	ns
	t_{VHH}	V_{HH} Rise and Fall Time (See Note)	Min	250	ns
	t_{RSP}	RESET# Setup Time for Temporary Sector Unprotect	Min	4	µs
	t_{RRB}	RESET# Hold Time from RY/BY# High for Temporary Sector Unprotect	Min	4	µs

Note: *Not 100% tested.*

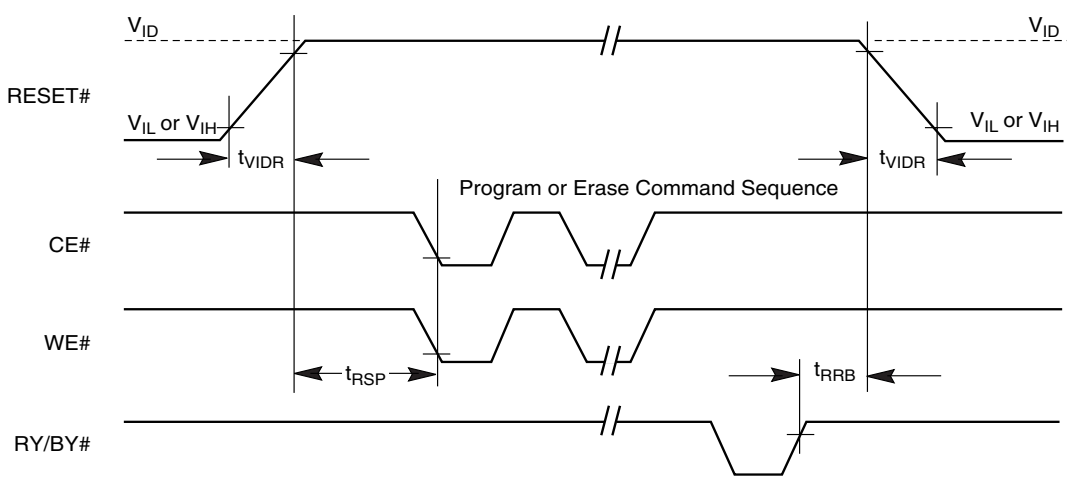

Figure 2I. Temporary Sector Unprotect Timing Diagram

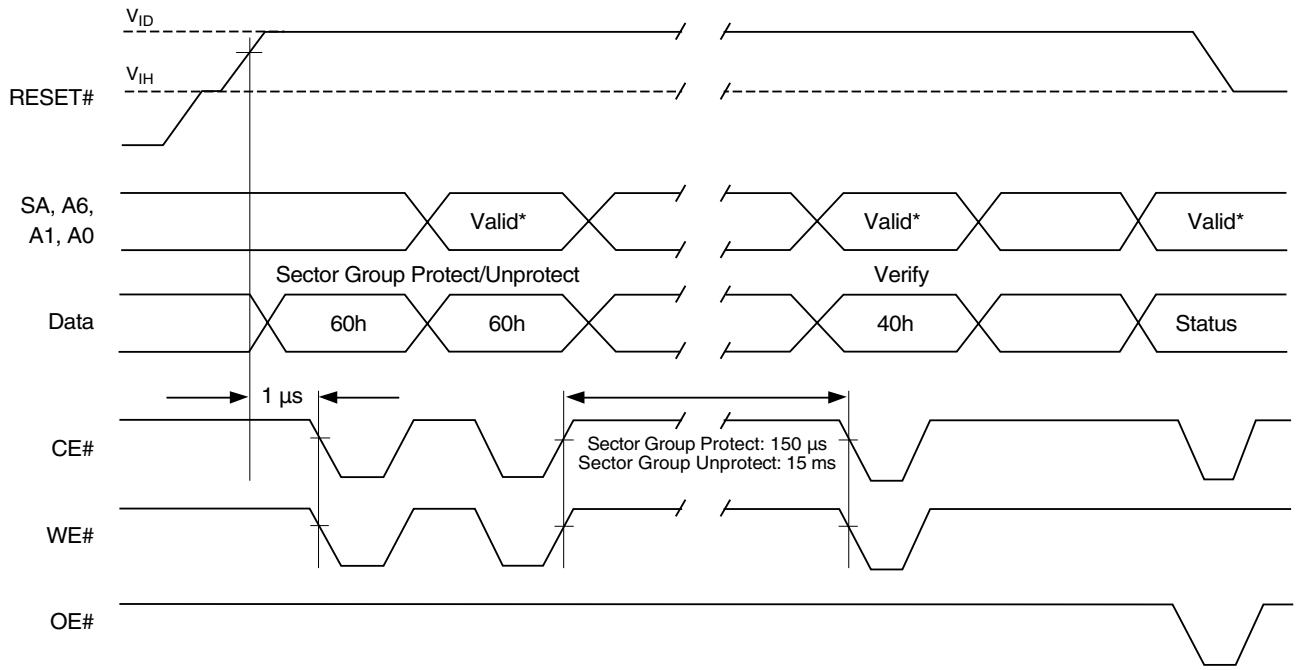

Notes:

1. *For sector protect, A6 = 0, A1 = 1, A0 = 0. For sector unprotect, A6 = 1, A1 = 1, A0 = 0.*
2. *S29PL129J - During CE1# transitions, CE2# = V_{IH}; During CE2# transitions, CE1# = V_{IH}*
3. *S29PL129J - There are two CE# (CE1#, CE2#). In the above waveform CE# = CE1# or CE2#*

Figure 22. Sector/Sector Block Protect and Unprotect Timing Diagram

Controlled Erase Operations

Table 31. Alternate CE# Controlled Erase and Program Operations

Parameter				Speed Options				
JEDEC	Std	Description		55	60	65	70	Unit
t_{AVAV}	t_{WC}	Write Cycle Time (Note 1)	Min	55	60	65	70	ns
t_{AVWL}	t_{AS}	Address Setup Time	Min	0				ns
t_{ELAX}	t_{AH}	Address Hold Time	Min	30	35			ns
t_{DVEH}	t_{DS}	Data Setup Time	Min	25	30			ns
t_{EHDX}	t_{DH}	Data Hold Time	Min	0				ns
t_{GHEL}	t_{GHEL}	Read Recovery Time Before Write (OE# High to WE# Low)	Min	0				ns
t_{WLEL}	t_{WS}	WE# Setup Time	Min	0				ns
t_{EHWH}	t_{WH}	WE# Hold Time	Min	0				ns
t_{ELEH}	t_{CP}	CE# (CE1# or CE#2 in PL129J) Pulse Width	Min	35	40			ns
t_{EHEL}	t_{CPH}	CE# (CE1# or CE#2 in PL129J) Pulse Width High	Min	20	25			ns
t_{WHWH1}	t_{WHWH1}	Programming Operation (Note 2)	Typ	6				µs
t_{WHWH1}	t_{WHWH1}	Accelerated Programming Operation (Note 2)	Typ	4				µs
t_{WHWH2}	t_{WHWH2}	Sector Erase Operation (Note 2)	Typ	0.5				sec

Notes:

1. *Not 100% tested.*
2. *See the "Erase And Programming Performance" section for more information.*

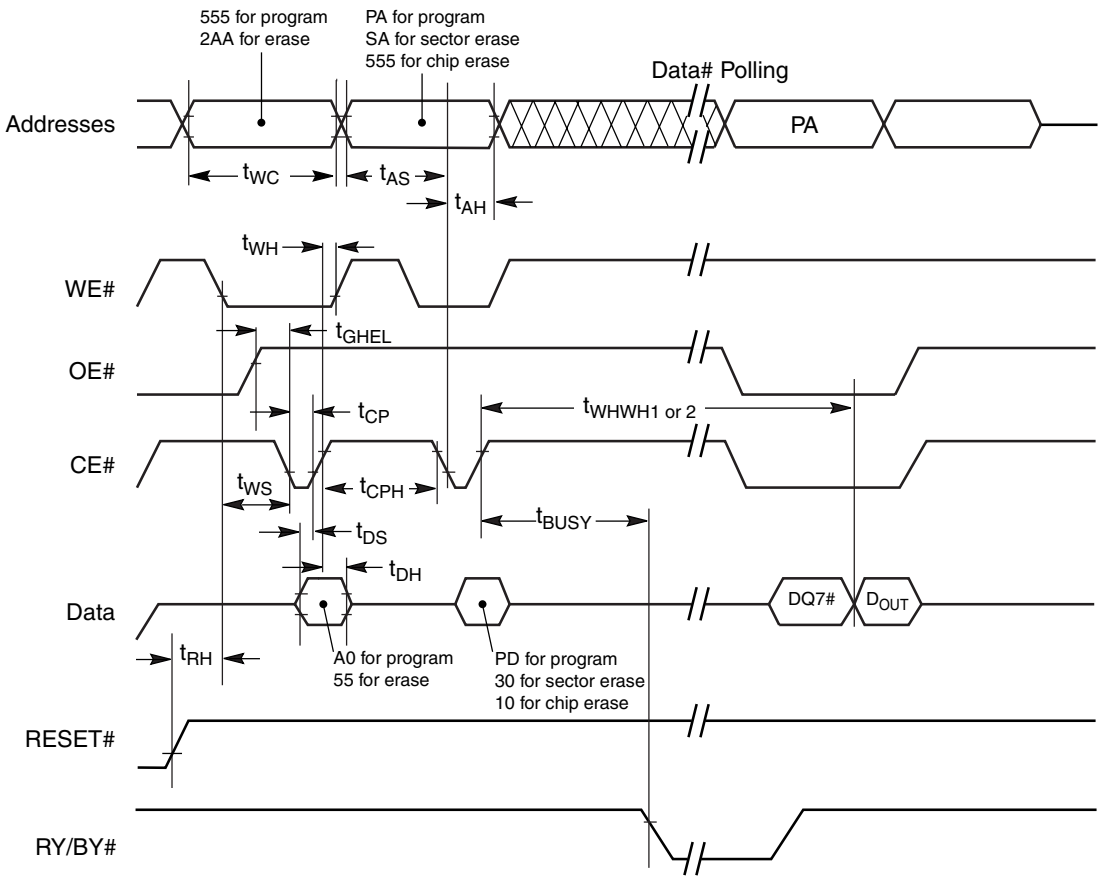

Notes:

1. *Figure indicates last two bus cycles of a program or erase operation.*
2. *PA = program address, SA = sector address, PD = program data.*
3. *DQ7# is the complement of the data written to the device. D_{OUT} is the data written to the device*
4. *S29PL129J - During CE1# transitions, CE2# = V_{IH}; During CE2# transitions, CE1# = V_{IH}*
5. *S29PL129J - There are two CE# (CE1#, CE2#). In the above waveform CE# = CE1# or CE2#*

Table 32. Alternate CE# Controlled Write (Erase/Program) Operation Timings

Table 33. CEI#/CE2# Timing (S29PLI29J only)

Parameter		Description		All Speed Options	Unit
JEDEC	Std				
	t_{CCR}	CE1#/CE2# Recover Time	Min	30	ns

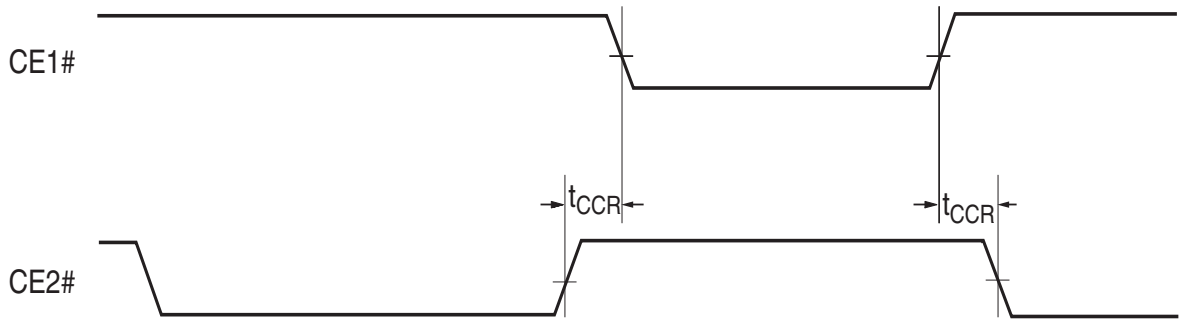

Figure 23. Timing Diagram for Alternating Between CEI# and CE2# Control

Table 34. Erase And Programming Performance

Parameter		Typ (Note I)	Max (Note 2)	Unit	Comments
Sector Erase Time		0.5	2	sec	Excludes 00h programming prior to erasure (Note 4)
Chip Erase Time	PL127J/129J	135	216	sec	
	PL064J	71	113.6	sec	
	PL032J	39	62.4	sec	
Word Program Time		6	100	µs	Excludes system level overhead (Note 5)
Accelerated Word Program Time		4	60	µs	
Chip Program Time (Note 3)	PL127J/129J	50.4	200	sec	
	PL064J	25.2	50.4	sec	
	PL032J	12.6	25.2	sec	

Notes:

1. *Typical program and erase times assume the following conditions: 25°C, 3.0 V V_{CC}, 100,000 cycles. Additionally, programming typicals assume checkerboard pattern. All values are subject to change.*
2. *Under worst case conditions of 90°C, V_{CC} = 2.7 V, 1,000,000 cycles. All values are subject to change.*
3. *The typical chip programming time is considerably less than the maximum chip programming time listed, since most bytes program faster than the maximum program times listed.*
4. *In the pre-programming step of the Embedded Erase algorithm, all bytes are programmed to 00h before erasure.*
5. *System-level overhead is the time required to execute the two- or four-bus-cycle sequence for the program command. See Table 21 for further information on command definitions.*
6. *The device has a minimum erase and program cycle endurance of 100,000 cycles.*

BGA Pin Capacitance

Parameter Symbol	Parameter Description	Test Setup	Typ	Max	Unit
C_{IN}	Input Capacitance	V_{IN} = 0	6.3	7	pF
C_{OUT}	Output Capacitance	V_{OUT} = 0	7.0	8	pF
C_{IN2}	Control Pin Capacitance	V_{IN} = 0	5.5	8	pF
C_{IN3}	WP#/ACC Pin Capacitance	V_{IN} = 0	11	12	pF

Notes:

1. *Sampled, not 100% tested.*
2. *Test conditions T_A = 25°C, f = 1.0 MHz.*

Physical Dimensions

VBG080—80-Ball Fine-pitch Ball Grid Array 8 x 11 mm Package (PLI27J and PLI29J)

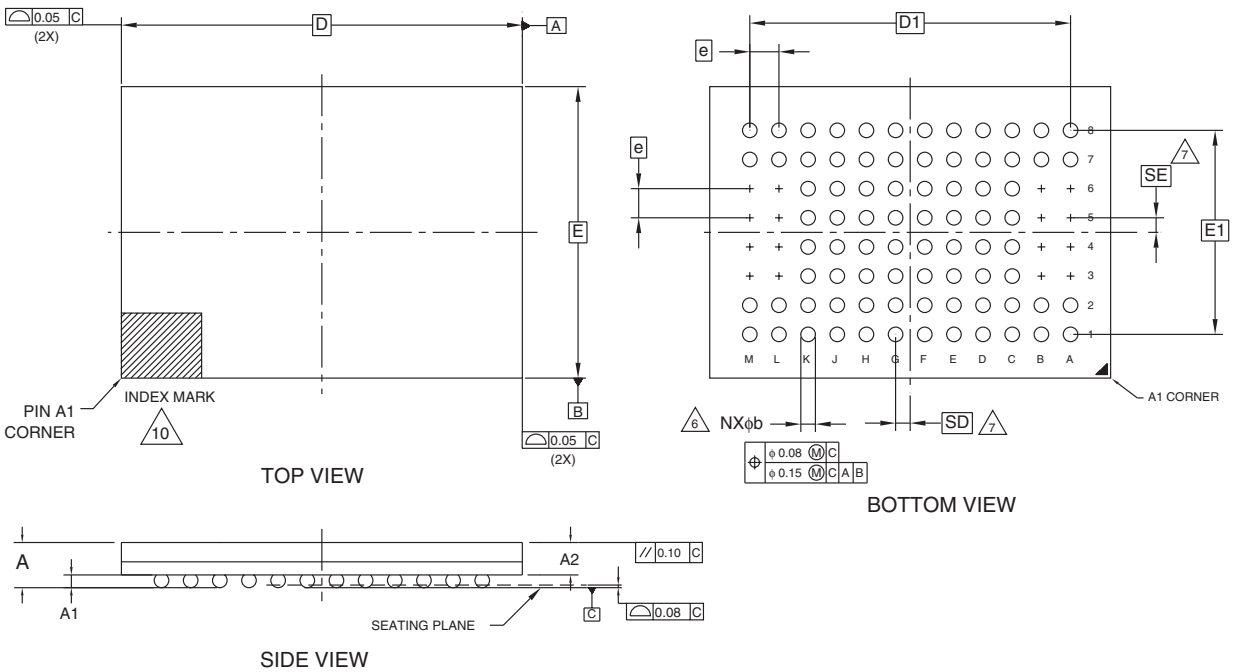

PACKAGE	VBG 080			
JEDEC	N/A			
	11.00 mm x 8.00 mm NOM PACKAGE			
SYMBOL	MIN	NOM	MAX	NOTE
A	---	---	1.00	OVERALL THICKNESS
A1	0.18	---	---	BALL HEIGHT
A2	0.62	---	0.76	BODY THICKNESS
D	11.00 BSC.			BODY SIZE
E	8.00 BSC.			BODY SIZE
D1	8.80 BSC.			BALL FOOTPRINT
E1	5.60 BSC.			BALL FOOTPRINT
MD	12			ROW MATRIX SIZE D DIRECTION
ME	8			ROW MATRIX SIZE E DIRECTION
N	80			TOTAL BALL COUNT
ϕb	0.33	---	0.43	BALL DIAMETER
e	0.80 BSC.			BALL PITCH
SD / SE	0.40 BSC.			SOLDER BALL PLACEMENT
	(A3-A6,B3-B6,L3-L6,M3-M6)			DEPOPULATED SOLDER BALLS

NOTES:

1. DIMENSIONING AND TOLERANCING PER ASME Y14.5M-1994.
2. ALL DIMENSIONS ARE IN MILLIMETERS.
3. BALL POSITION DESIGNATION PER JESD 95-1, SPP-010 (EXCEPT AS NOTED).
4. e REPRESENTS THE SOLDER BALL GRID PITCH.
5. SYMBOL "MD" IS THE BALL ROW MATRIX SIZE IN THE "D" DIRECTION.

   SYMBOL "ME" IS THE BALL COLUMN MATRIX SIZE IN THE "E" DIRECTION.

   N IS THE TOTAL NUMBER OF SOLDER BALLS.

6. DIMENSION "b" IS MEASURED AT THE MAXIMUM BALL DIAMETER IN A PLANE PARALLEL TO DATUM C.
7. SD AND SE ARE MEASURED WITH RESPECT TO DATUMS A AND B AND DEFINE THE POSITION OF THE CENTER SOLDER BALL IN THE OUTER ROW.

   WHEN THERE IS AN ODD NUMBER OF SOLDER BALLS IN THE OUTER ROW PARALLEL TO THE D OR E DIMENSION, RESPECTIVELY, SD OR SE = 0.000.

   WHEN THERE IS AN EVEN NUMBER OF SOLDER BALLS IN THE OUTER ROW, SD OR SE = e/2

8. NOT USED.
9. "+" INDICATES THE THEORETICAL CENTER OF DEPOPULATED BALLS.
10. A1 CORNER TO BE IDENTIFIED BY CHAMFER, LASER OR INK MARK, METALLIZED MARK INDENTATION OR OTHER MEANS.

3329 \ 16-038.25b

VBH064—64-Ball Fine-pitch Ball Grid Array 8 x 11.6 mm package (PLI27J)

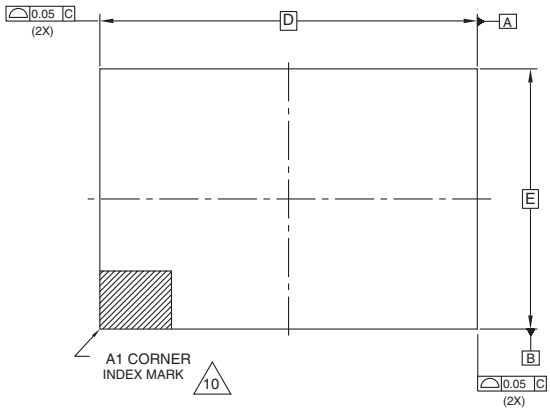

TOP VIEW

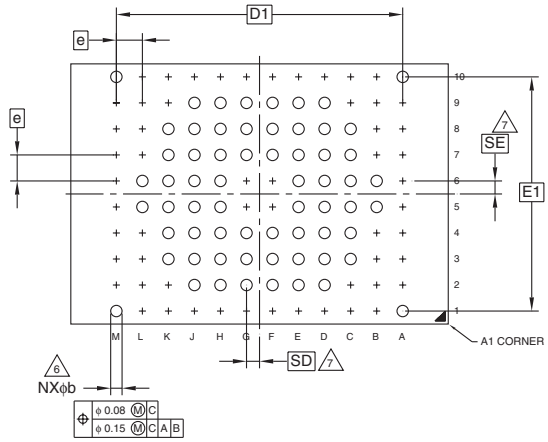

BOTTOM VIEW

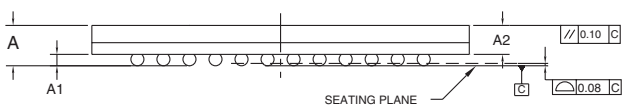

SIDE VIEW

PACKAGE	VBH 064			
JEDEC	N/A			
	11.60 mm x 8.00 mm NOM PACKAGE			
SYMBOL	MIN	NOM	MAX	NOTE
A	---	---	1.00	OVERALL THICKNESS
A1	0.18	---	---	BALL HEIGHT
A2	0.62	---	0.76	BODY THICKNESS
D	11.60 BSC.			BODY SIZE
E	8.00 BSC.			BODY SIZE
D1	8.80 BSC.			BALL FOOTPRINT
E1	7.20 BSC.			BALL FOOTPRINT
MD	12			ROW MATRIX SIZE D DIRECTION
ME	10			ROW MATRIX SIZE E DIRECTION
N	64			TOTAL BALL COUNT
ϕb	0.33	---	0.43	BALL DIAMETER
e	0.80 BSC.			BALL PITCH
SD / SE	0.40 BSC.			SOLDER BALL PLACEMENT
	(A2-9,B1-4,B7-10,C1-K1, M2-9,C10-K10,L1-4,L7-10, G5-6,F5-6)			DEPOPULATED SOLDER BALLS

NOTES:

1. DIMENSIONING AND TOLERANCING PER ASME Y14.5M-1994.
2. ALL DIMENSIONS ARE IN MILLIMETERS.
3. BALL POSITION DESIGNATION PER JESD 95-1, SPP-010 (EXCEPT AS NOTED).
4. e REPRESENTS THE SOLDER BALL GRID PITCH.
5. SYMBOL "MD" IS THE BALL ROW MATRIX SIZE IN THE "D" DIRECTION.

   SYMBOL "ME" IS THE BALL COLUMN MATRIX SIZE IN THE "E" DIRECTION.

   N IS THE TOTAL NUMBER OF SOLDER BALLS.

6. DIMENSION "b" IS MEASURED AT THE MAXIMUM BALL DIAMETER IN A PLANE PARALLEL TO DATUM C.
7. SD AND SE ARE MEASURED WITH RESPECT TO DATUMS A AND B AND DEFINE THE POSITION OF THE CENTER SOLDER BALL IN THE OUTER ROW.

   WHEN THERE IS AN ODD NUMBER OF SOLDER BALLS IN THE OUTER ROW PARALLEL TO THE D OR E DIMENSION, RESPECTIVELY, SD OR SE = 0.000.

   WHEN THERE IS AN EVEN NUMBER OF SOLDER BALLS IN THE OUTER ROW, SD OR SE = e/2

8. NOT USED.
9. "+" INDICATES THE THEORETICAL CENTER OF DEPOPULATED BALLS.
10. A1 CORNER TO BE IDENTIFIED BY CHAMFER, LASER OR INK MARK, METALLIZED MARK INDENTATION OR OTHER MEANS.

3330 \ 16-038.25b

VBK048—48-Ball Fine-pitch Ball Grid Array 8.15 x 6.15 mm package (PLI27J)

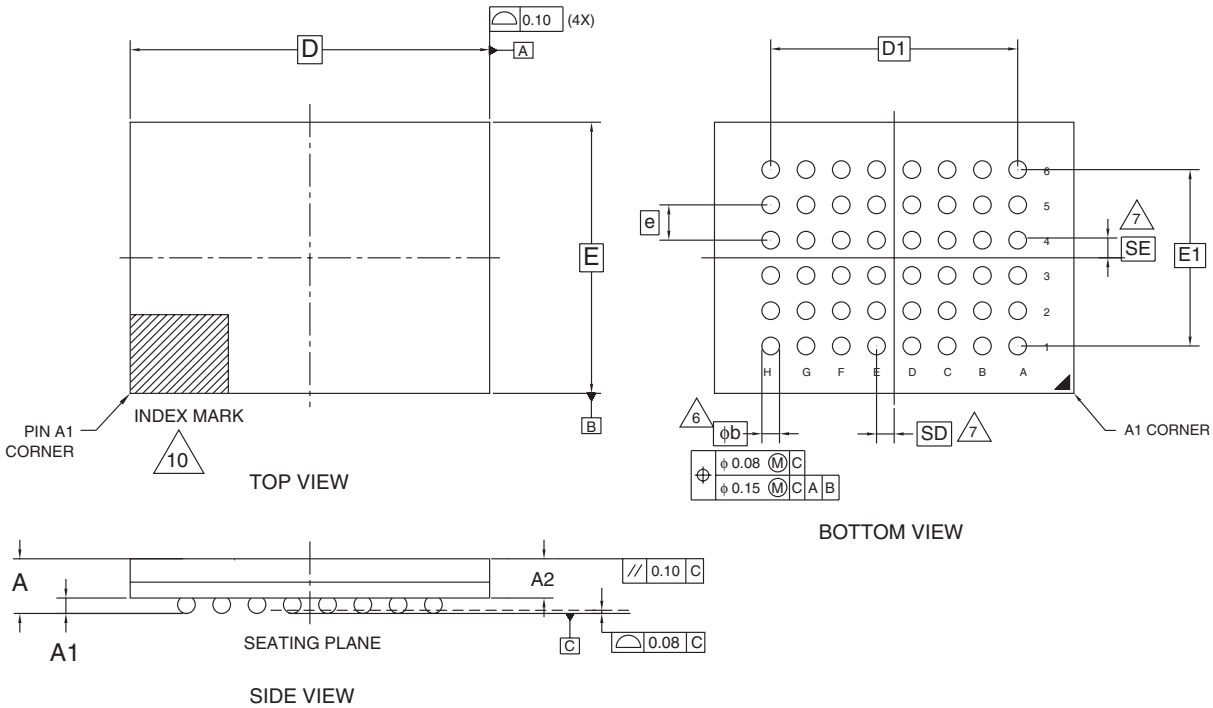

PACKAGE	VBK 048			
JEDEC	N/A			
	8.15 mm x 6.15 mm NOM PACKAGE			
SYMBOL	MIN	NOM	MAX	NOTE
A	---	---	1.00	OVERALL THICKNESS
A1	0.18	---	---	BALL HEIGHT
A2	0.62	---	0.76	BODY THICKNESS
D	8.15 BSC.			BODY SIZE
E	6.15 BSC.			BODY SIZE
D1	5.60 BSC.			BALL FOOTPRINT
E1	4.00 BSC.			BALL FOOTPRINT
MD	8			ROW MATRIX SIZE D DIRECTION
ME	6			ROW MATRIX SIZE E DIRECTION
N	48			TOTAL BALL COUNT
ϕb	0.33	---	0.43	BALL DIAMETER
e	0.80 BSC.			BALL PITCH
SD / SE	0.40 BSC.			SOLDER BALL PLACEMENT
	---			DEPOPULATED SOLDER BALLS

NOTES:

1. DIMENSIONING AND TOLERANCING PER ASME Y14.5M-1994.
2. ALL DIMENSIONS ARE IN MILLIMETERS.
3. BALL POSITION DESIGNATION PER JESD 95-1, SPP-010 (EXCEPT AS NOTED).
4. e REPRESENTS THE SOLDER BALL GRID PITCH.
5. SYMBOL "MD" IS THE BALL ROW MATRIX SIZE IN THE "D" DIRECTION.

   SYMBOL "ME" IS THE BALL COLUMN MATRIX SIZE IN THE "E" DIRECTION.

   N IS THE TOTAL NUMBER OF SOLDER BALLS.

6. DIMENSION "b" IS MEASURED AT THE MAXIMUM BALL DIAMETER IN A PLANE PARALLEL TO DATUM C.
7. SD AND SE ARE MEASURED WITH RESPECT TO DATUMS A AND B AND DEFINE THE POSITION OF THE CENTER SOLDER BALL IN THE OUTER ROW.

   WHEN THERE IS AN ODD NUMBER OF SOLDER BALLS IN THE OUTER ROW PARALLEL TO THE D OR E DIMENSION, RESPECTIVELY, SD OR SE = 0.000.

   WHEN THERE IS AN EVEN NUMBER OF SOLDER BALLS IN THE OUTER ROW, SD OR SE = e/2

8. NOT USED.
9. "+" INDICATES THE THEORETICAL CENTER OF DEPOPULATED BALLS.
10. A1 CORNER TO BE IDENTIFIED BY CHAMFER, LASER OR INK MARK, METALLIZED MARK INDENTATION OR OTHER MEANS.

3338 \ 16-038.25b

TLC056—56-Ball Fine-pitch BGA 7 x 9mm package (PL064J and PL032J)

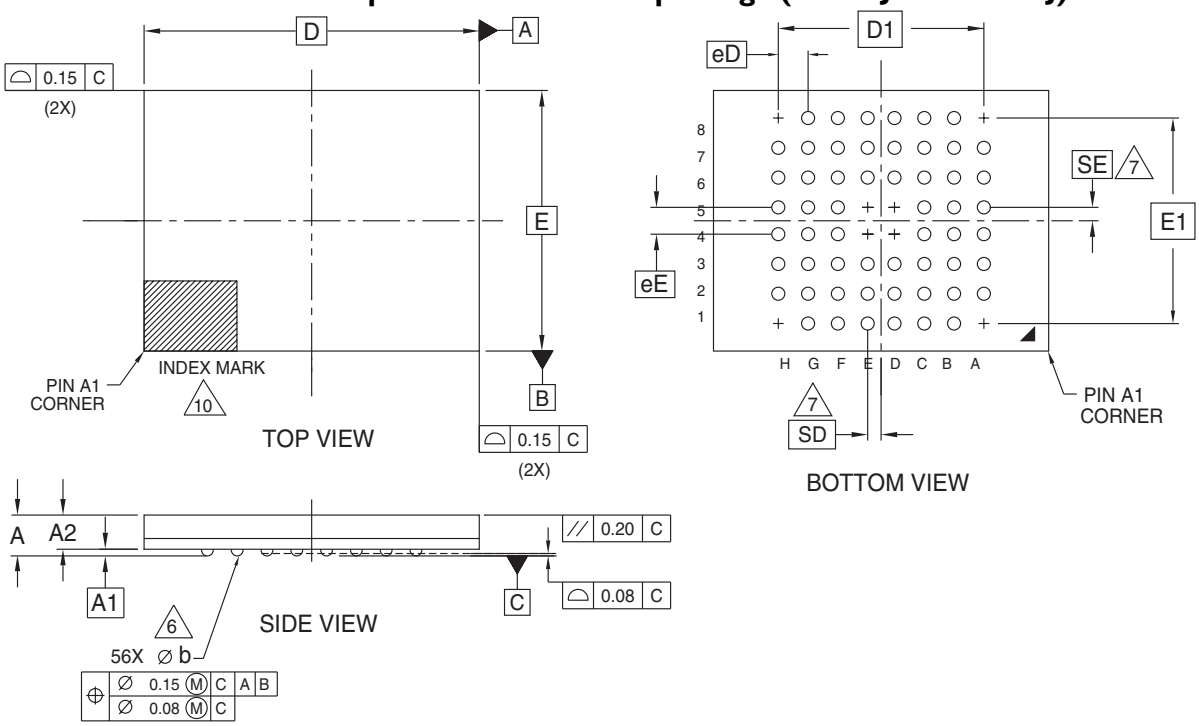

PACKAGE	TLC 056			
JEDEC	N/A			
D x E	9.00 mm x 7.00 mm PACKAGE			
SYMBOL	MIN	NOM	MAX	NOTE
A	---	---	1.20	PROFILE
A1	0.20	---	---	BALL HEIGHT
A2	0.81	---	0.97	BODY THICKNESS
D		9.00 BSC.		BODY SIZE
E		7.00 BSC.		BODY SIZE
D1		5.60 BSC.		MATRIX FOOTPRINT
E1		5.60 BSC.		MATRIX FOOTPRINT
MD		8		MATRIX SIZE D DIRECTION
ME		8		MATRIX SIZE E DIRECTION
n		56		BALL COUNT
ϕb	0.35	0.40	0.45	BALL DIAMETER
eE		0.80 BSC.		BALL PITCH
eD		0.80 BSC		BALL PITCH
SD / SE		0.40 BSC.		SOLDER BALL PLACEMENT
	A1,A8,D4,D5,E4,E5,H1,H8			DEPOPULATED SOLDER BALLS

NOTES:

1. DIMENSIONING AND TOLERANCING METHODS PER ASME Y14.5M-1994.
2. ALL DIMENSIONS ARE IN MILLIMETERS.
3. BALL POSITION DESIGNATION PER JESD 95-1, SPP-010.
4. e REPRESENTS THE SOLDER BALL GRID PITCH.
5. SYMBOL "MD" IS THE BALL MATRIX SIZE IN THE "D" DIRECTION.

   SYMBOL "ME" IS THE BALL MATRIX SIZE IN THE "E" DIRECTION.

   n IS THE NUMBER OF POPULTED SOLDER BALL POSITIONS FOR MATRIX SIZE MD X ME.

6. DIMENSION "b" IS MEASURED AT THE MAXIMUM BALL DIAMETER IN A PLANE PARALLEL TO DATUM C.
7. SD AND SE ARE MEASURED WITH RESPECT TO DATUMS A AND B AND DEFINE THE POSITION OF THE CENTER SOLDER BALL IN THE OUTER ROW.

   WHEN THERE IS AN ODD NUMBER OF SOLDER BALLS IN THE OUTER ROW SD OR SE = 0.000.

   WHEN THERE IS AN EVEN NUMBER OF SOLDER BALLS IN THE OUTER ROW, SD OR SE = e/2

8. "+" INDICATES THE THEORETICAL CENTER OF DEPOPULATED BALLS.
9. N/A
10. A1 CORNER TO BE IDENTIFIED BY CHAMFER, LASER OR INK MARK, METALLIZED MARK INDENTATION OR OTHER MEANS.

3348 \ 16-038.22a

TS056—20 x 14 mm, 56-pin TSOP (PLI27J)

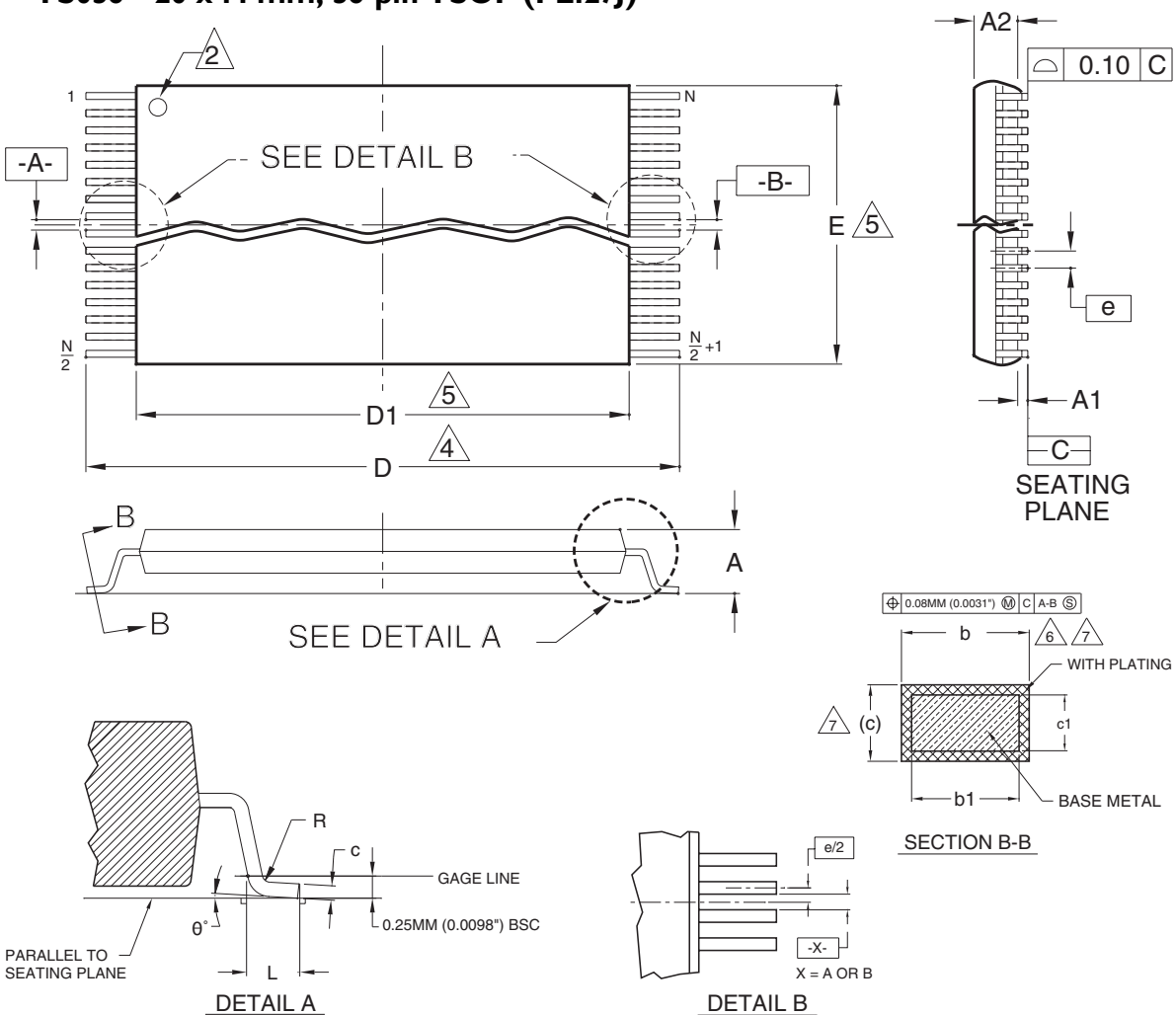

Package	TS 056		
Jedec	MO-142 (B) EC		
Symbol	MIN	NOM	MAX
A	—	—	1.20
A1	0.05	—	0.15
A2	0.95	1.00	1.05
b1	0.17	0.20	0.23
b	0.17	0.22	0.27
c1	0.10	—	0.16
c	0.10	—	0.21
D	19.80	20.00	20.20
D1	18.30	18.40	18.50
E	13.90	14.00	14.10
e	0.50 BASIC		
L	0.50	0.60	0.70
0	0°	3°	5°
R	0.08	—	0.20
N	56		

NOTES:

1. CONTROLLING DIMENSIONS ARE IN MILLIMETERS (MM). (DIMENSIONING AND TOLERANCING CONFORMS TO ANSI Y14.5M-1982)
2. PIN 1 IDENTIFIER FOR STANDARD PIN OUT (DIE UP).
3. PIN 1 IDENTIFIER FOR REVERSE PIN OUT (DIE DOWN), INK OR LASER MARK.
4. TO BE DETERMINED AT THE SEATING PLANE -C-. THE SEATING PLANE IS DEFINED AS THE PLANE OF CONTACT THAT IS MADE WHEN THE PACKAGE LEADS ARE ALLOWED TO REST FREELY ON A FLAT HORIZONTAL SURFACE.
5. DIMENSIONS D1 AND E DO NOT INCLUDE MOLD PROTRUSION. ALLOWABLE MOLD PROTUSION IS 0.15MM (.0059") PER SIDE.
6. DIMENSION b DOES NOT INCLUDE DAMBAR PROTUSION. ALLOWABLE DAMBAR PROTUSION SHALL BE 0.08 (0.0031") TOTAL IN EXCESS OF b DIMENSION AT MAX. MATERIAL CONDITION. MINIMUM SPACE BETWEEN PROTRUSION AND AN ADJACENT LEAD TO BE 0.07 (0.0028").
7. THESE DIMENSIONS APPLY TO THE FLAT SECTION OF THE LEAD BETWEEN 0.10MM (.0039") AND 0.25MM (0.0098") FROM THE LEAD TIP.
8. LEAD COPLANARITY SHALL BE WITHIN 0.10MM (0.004") AS MEASURED FROM THE SEATING PLANE.
9. DIMENSION "e" IS MEASURED AT THE CENTERLINE OF THE LEADS.

Revision Summary

Revision A (January 29, 2004)

Initial release.

Revision A+1 (February 12, 2004)

Software Features

Included backward compatibility with MBM29xx families.

General Description

48-ball BGA package is not supported and was removed.

Ordering Information

Model numbers for the 48-ball BGA configurations were removed.

64-Ball Fine Pitch BGA—MCP Compatible

An illustration was added to show the pin-out configuration.

Table 20

Added the description of 01h for address 4Fh and removed the 0004 data.

Table 34

Provided the time units of measure for the erase and programming performances.

Revision A+2 (February 17, 2004)

Table 2l, "Memory Array Command Definitions"

Corrected typo in device ID.

Revision A+3 (February 25, 2004)

Architectural Advantages

Added 3V V_{IO} for PL064J and PL032J devices.

Ordering Information

Corrected the voltage rating, ball configuration, and physical dimensions for model numbers 12 and 13.

Connection Diagrams

Removed the 64-ball, 8x9 mm diagram.

Operating Ranges

Clarified the supply voltages that apply to the PL127J/PL129J and all other PLxxxJ products.

BGA Pin Capacitance

Added information applicable to the C_{IN3} symbol.

Package Drawings

Removed the 9x8 mm package drawing.

Revision A+4 (February 27, 2004)

Connection Diagrams

Added the 56-ball 7x9 mm pinout diagram.

Package Options

Updated to include the 8 x 6 mm, 48-ball Fine pitch BGA and 7 x 9 mm, 56-ball Fine-pitch BGA options.

Physical Dimensions

Added the VBK048 package drawing.

Revision A+5 (March 15, 2004)

Connection Diagrams

Changed name of "VBH064—64-Ball Fine-pitch Ball Grid Array 8 x 11.6 mm package (PL127J)" section

Revision A+6 (May 24, 2004)

Global

Removed V_{IO}, added TSOP, fixed SecSi DQ bits.

Product Selector Guide

Updated specs in this table.

Ordering Information

Updated the Model Number offerings.

Valid Combinations Table (128Mb)

Corrected the Package Markings for the 64-ball FBGA packages.

Added combinations for the TLC056 package on the PL064J and PL032J devices.

Valid Combinations for BGA Packages (128Mb)

Updated information in this table.

Package Options

Added the 7 x 9mm 56-ball package.

Connection Diagram

56-ball connection diagram

Erase/Programming Performance Table

Notes 1 and 2 corrected to reflect accurate temperature ranges and cycling.

Revision A+61 (August 13, 2004)

Revision A+62 (April 7, 2005)

Typical sleep mode current is 0.2uA

Trademarks and Notice

The contents of this document are subject to change without notice.This document may contain information on a SpansionTM product under development by Spansion LLC. Spansion LLC reserves the right to change or discontinue work on any product without notice. The information in this document is provided as is without warranty or guarantee of any kind as to its accuracy, completeness, operability, fitness for particular purpose, merchantability, non-infringement of third-party rights, or any other warranty, express, implied, or statutory. Spansion LLC assumes no liability for any damages of any kind arising out of the use of the information in this document.

The products described in this document are designed, developed and manufactured as contemplated for general use, including without limitation, ordinary industrial use, general office use, personal use, and household use, but are not designed, developed and manufactured as contemplated (1) for any use that includes fatal risks or dangers that, unless extremely high safety is secured, could have a serious effect to the public, and could lead directly to death, personal injury, severe physical damage or other loss (i.e., nuclear reaction control in nuclear facility, aircraft flight control, air traffic control, mass transport control, medical life support system, missile launch control in weapon system), or (2) for any use where chance of failure is intolerable (i.e., submersible repeater and artificial satellite). Please note that Spansion will not be liable to you and/or any third party for any claims or damages arising in connection with above-mentioned uses of the products. Any semiconductor devices have an inherent chance of failure. You must protect against injury, damage or loss from such failures by incorporating safety design measures into your facility and equipment such as redundancy, fire protection, and prevention of over-current levels and other abnormal operating conditions. If any products described in this document represent goods or technologies subject to certain restrictions on export under the Foreign Exchange and Foreign Trade Law of Japan, the US Export Administration Regulations or the applicable laws of any other country, the prior authorization by the respective government entity will be required for export of those products.

The contents of this document are subject to change without notice.This document may contain information on a Spansion™ product under development by Spansion LLC. Spansion LLC reserves the right to change or discontinue work on any product without notice. The information in this document is provided as is without warranty or guarantee of any kind as to its accuracy, completeness, operability, fitness for particular purpose, merchantability, non-infringement of third-party rights, or any other warranty, express, implied, or statutory. Spansion LLC assumes no liability for any damages of any kind arising out of the use of the information in this document.

Copyright © 2004-2005 Spansion LLC. All rights reserved.

Spansion™, the Spansion™ logo, MirrorBit, combinations thereof, and ExpressFlash are trademarks of Spansion LLC. Other company and product names used in this publication are for identification purposes only and may be trademarks of their respective companies.